WIRING DIAGRAM

PREVOST

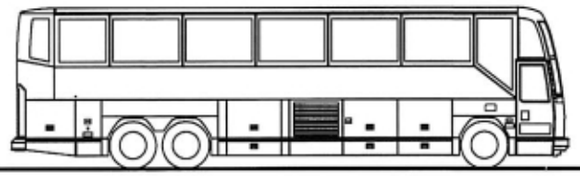

H3-41 & H3-45 BUS

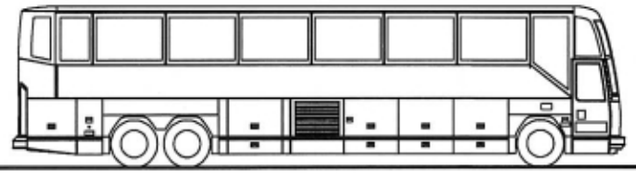

REFERENCE:	MODEL 97.5	NO:	D060882

EFF. W/ OC#	96080	PRIOR TO / OC#	DR. MARTIN LAFLAMME	DATE:	96-10-04
EFF. W/ VEH.#	V1718, V1779 ...	PRIOR TO / VEH.#	CK. ROCH CHAMPAGNE	APPR.	ROLAND LAPOINTE

REV.	DATE	DESCRIPTION	PAGE	BY	CK.	APPR.
01	97-01-08	UPDATE PAGES : H, L, 2, 7, 8, 11.1, 11.4, 26.1, 26.2, 28 & NEW PAGE 11.5	← SEE	MH	[illegible]	[illegible]
02	97-02-05	ENTRANCE DOOR/DAMPER EFF. W/V1821 OC#97013	C, F, I, 13.1, 16	MH	[illegible]	[illegible]
03	97-03-27	RELAY MAGNETIC & RESISTOR A/C EFF. W/V1718, V1779... OC#97033	I, 13.2	MH	[illegible]	[illegible]
		ESPAR TIMER EFF. W/V1961 OC#97022	26.1, G3	MH	[illegible]	[illegible]
		UPDATE PAGES : B1, C, G1, G2, G4, H, 4, 9.1, 9.3, 10, 13.1, 18, 19, 20.1, 26.2, 27	← SEE	MH	[illegible]	[illegible]
04	97-04-15	FRESH AIR THERMOSTAT EFF. W/V1847 OC#97015	C, 13.1	MH	[illegible]	[illegible]
05	97-10-14	FRESH AIR THERMOSTAT ON COMPRESSEUR CLUTCH EFF. W/ W2204 OC#97135	C,G1,G2,G3,G4,I,13.1	JR	MH	[illegible]
06	97-10-23	NEW VOLTAGE REGULATOR EFF. W/ W2218 OC#97104	4	S.G.	JR	[illegible]
07	98-02	CUT OUT COMPRESSEUR WITH THERMOSTAT WB-98-07 EFF. V1779 A W2204	P 13.1	JR	JR	[illegible]
08	98-02	CUT OUT COMPRESSEUR WITH THERMOSTAT WB-98-07 EFF. W2205 A W2285	P 13.1	JR	JR	[illegible]
09	98-03	KIT TO ADD NIGHT LIGHT IN LAVATORY OC 98034 AVAILABLE FOR V1779 AT W2284	P.17	JR	JR	[illegible]
10	98-05	KIT TO ADD A LAVATORY FAN OC 98063 WB 98-21 EFF. V1779 TO W2284	P.23	JR	JR	[illegible]
11	98-09	LIQ. SOL. VALVE ADDED ON PASSENGER A/C SYSTEM WB 98-33 EFF. V1779 TO W2204	P13.1	JR	JR	[illegible]
		UPDATE ENTRANCE DOOR	P.16			
12	98-09	LIQ. SOL. VALVE ADDED ON PASSENGER A/C SYSTEM WB 98-33 EFF. W2205 TO W2284	P13.1	JR	JR	[illegible]
13	00-04	KIT TO MODIFY PASSENGER FRESH AIR DAMPER OC #00061 EFF. W1779 TO W2204	P13.1	JR	JR	[illegible]
14	00-04	KIT TO MODIFY PASSENGER FRESH AIR DAMPER OC #00061 EFF. W2205 TO W2284	P13.1	JR	JR	[illegible]

WIRING DIAGRAM INDEX

A	A/C & HEAT SYSTEM	Page:	13
	AIR DRYER	Page:	8
	ALARM & SIGNAL	Page:	7
	ABS	Page:	21
	ARRANGEMENT - CABLE	Page:	B
	ARRANGEMENT - HARNESS	Page:	C
	ARRANGEMENT - SPARE WIRE	Page:	D
B	BACK-UP ALARM	Page:	9.3
	BACK-UP MONITOR	Page:	27
C	CHARGING SYSTEM	Page:	4
	CIGAR LIGHTER	Page:	14
	CODE - CIRCUIT NUMBER	Page:	E
	CODE - CIRCUIT BREAKER	Page:	F
	CODE - CONNECTOR	Page:	G
	CODE - DIODE	Page:	H
	CODE - RELAY	Page:	I
	CODE - RESISTOR	Page:	J
	CODE - WIRING KEY	Page:	K
	CODE - FUSE	Page:	L
	CODE - MODULE	Page:	M
	CRUISE CONTROL - DDEC	Page:	5
D	DDEC III	Page:	5
	DIGITAL CLOCK	Page:	14
	DISTRIBUTION 12V	Page:	2
	DISTRIBUTION 24V	Page:	1
	DRIVER'S WINDOW LIFTER	Page:	14
E	ENGINE BLOCK HEATER	Page:	12
	ENGINE BREAKE SYSTEM	Page:	19
	ENGINE CONTROL	Page:	4
	ENTRANCE DOOR SEDAN	Page:	16
	ETHER COLD START	Page:	8
	EXTERIOR LIGHTIHG	Page:	9
F	FAN-CLUTCH RADIATOR	Page:	8
	FAST IDLE - DDEC	Page:	5
	FIRE DETECTOR	Page:	7
	FRONT DESTINATION SIGN	Page:	17
	FUEL WATER FILTER	Page:	8
	FUEL PRIME PUMP	Page:	12
G	GALLEY ACCESSORIES	Page:	23
	GROUND SYSTEM	Page:	3
H	HIGH BUOY	Page:	18
	HOTESS CHIME	Page:	12
I	INTERIOR LIGHTING	Page:	11
	INTERCOM	Page:	27
K	KNEELING SYSTEM	Page:	18
L	LAVATORY	Page:	17
	LOW BUOY	Page:	18
	LUGGAGE DOOR LOCK	Page:	19
	LAVATORY FAN	Page:	23
M	MIRROR-REAR VIEW	Page:	24
P	PARKING BREAKE SWITCH	Page:	8
	PASSENGER CHIME	Page:	12
	POWER 12V OUTLET	Page:	14
	PRODRIVER	Page:	8
R	RETARDER - WORLD TRANSM.	Page:	19
S	SOUND & VIDEO SYSTEM	Page:	20
	SPEEDOMETER (VDO)	Page:	15
	SUN VISOR	Page:	14
T	TACHOGRAPH-ELECTRONIC	Page:	15
	TACHOMETER (VDO)	Page:	15
	TELL TALE LIGHT MODULES	Page	28
	THERMOMETER-DIGITAL	Page:	28
	TRANSMISSION - MANUAL	Page:	22
	TRANSMISSION - WORLD	Page:	6
W	WATER HEATER PRE-HEAT	Page:	26
	WATER TANK HEATER LAVATORY	Page:	12
	WHEEL CHAIR LIFT - RICHON 9000	Page:	25.2
	WHEEL CHAIR LIFT - STEW. & STEV.	Page:	25.1
	WINDSHIELD (UP) FAN DEFROSTOR	Page:	22
	WINDSHIELD (UP) HEATED	Page:	22
	WIPER & WASHER	Page:	10

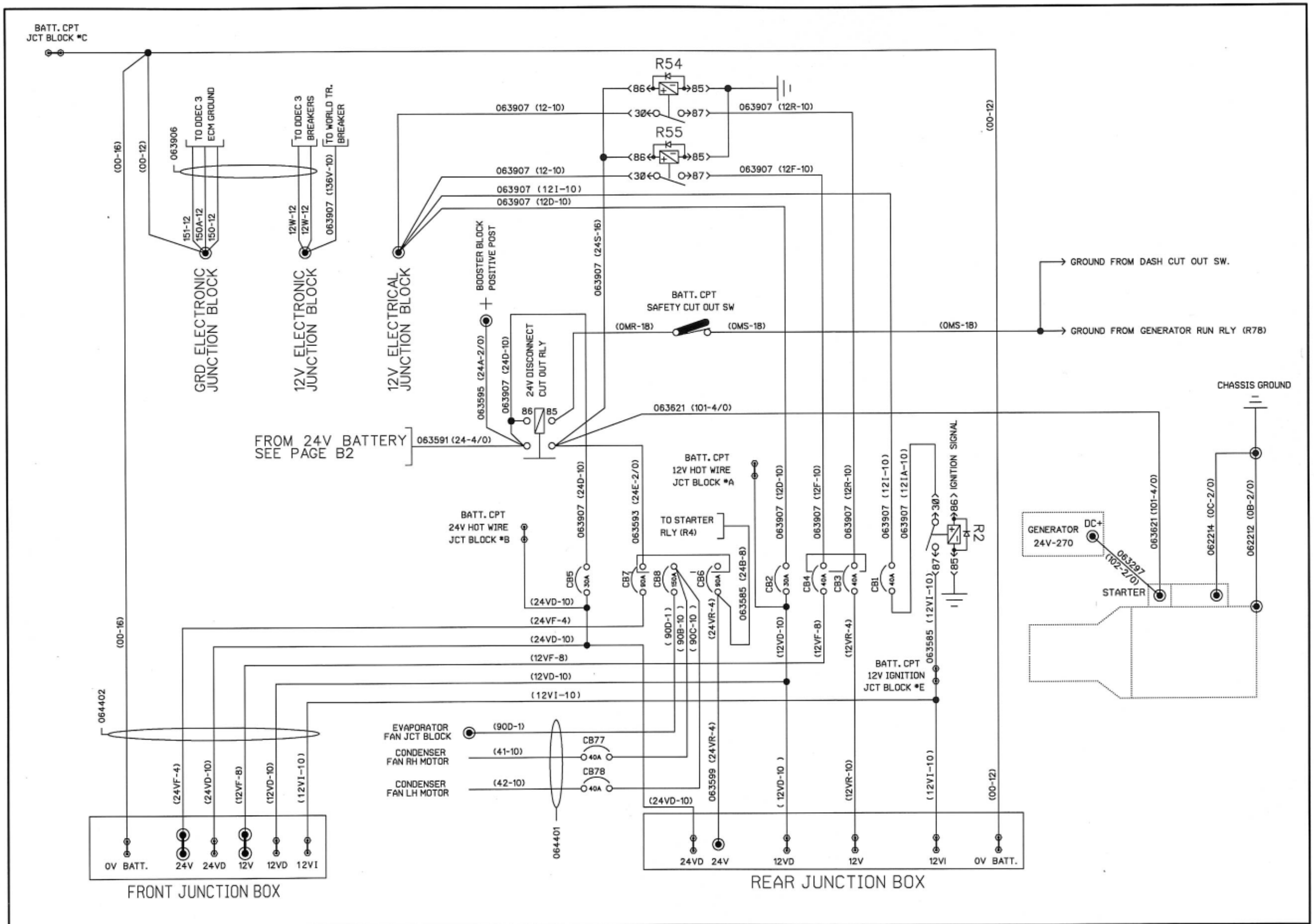

PREVOST	WIRING DIAGRAM	NO: D060882	PAGE: B1	REVISION 00

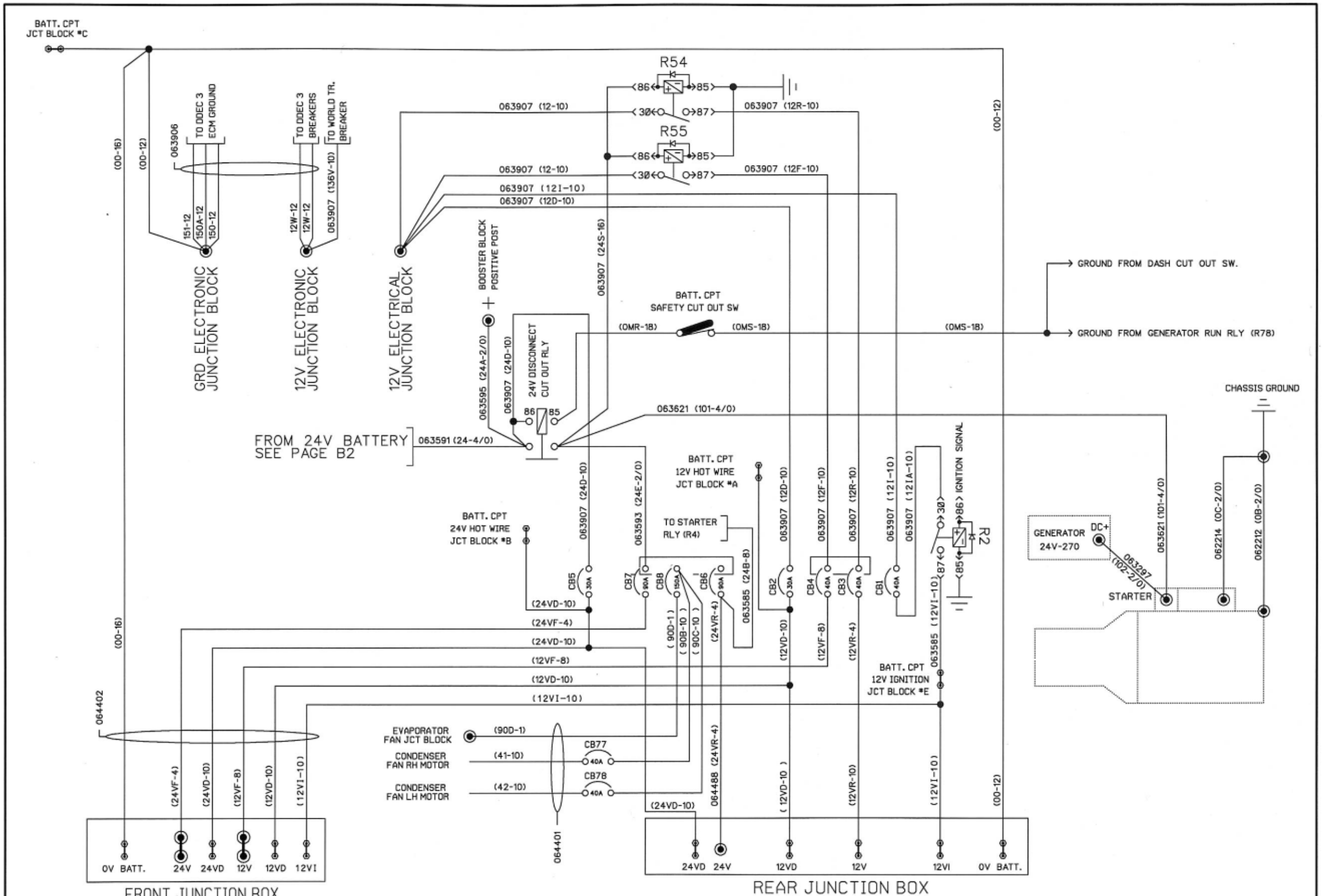

PREVOST	WIRING DIAGRAM	NO: D060882	PAGE: B1	REVISION 03

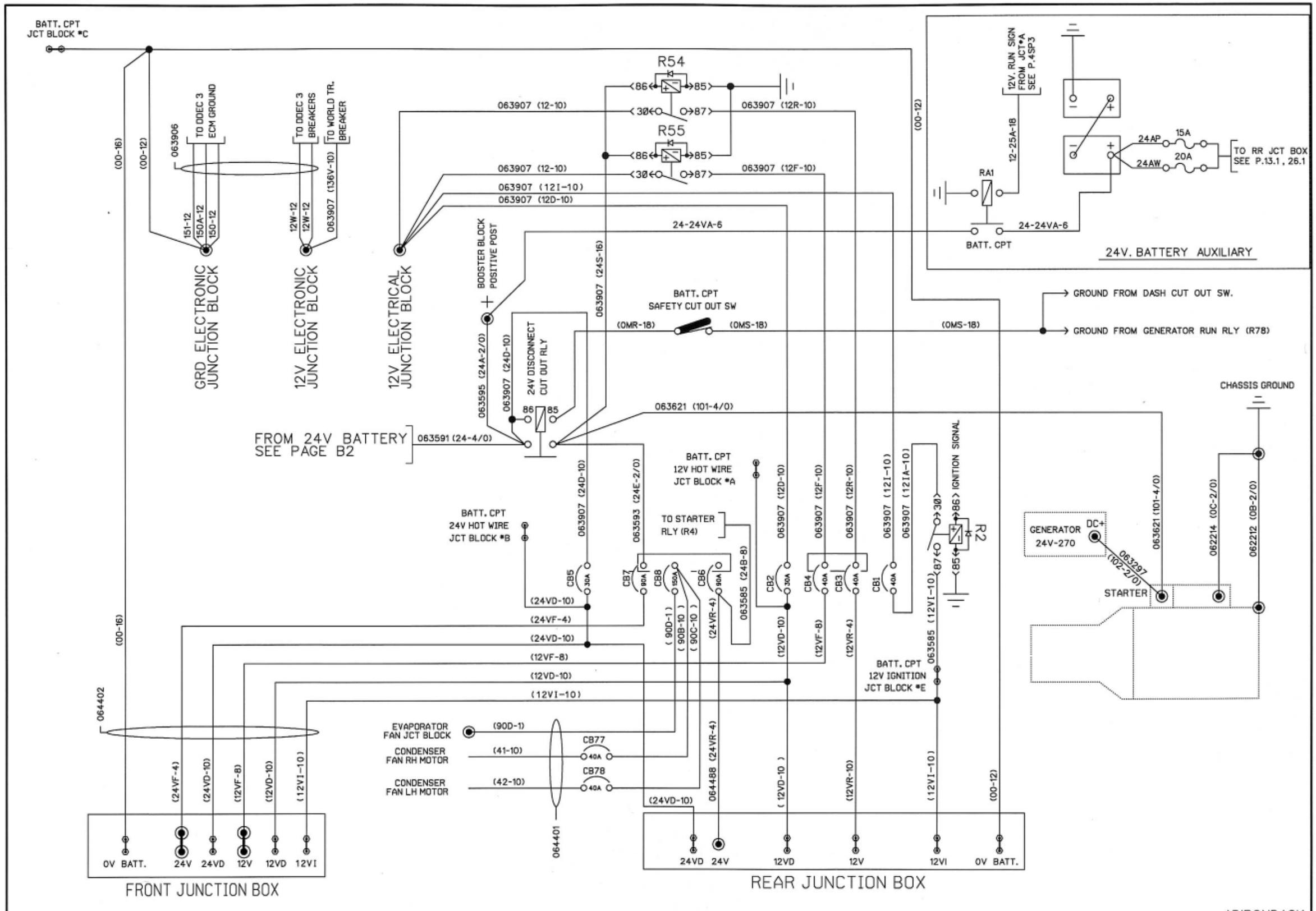

ADIRONDACK

PREVOST	WIRING DIAGRAM	NO: D060882	PAGE: B1sp1	REVISION 00

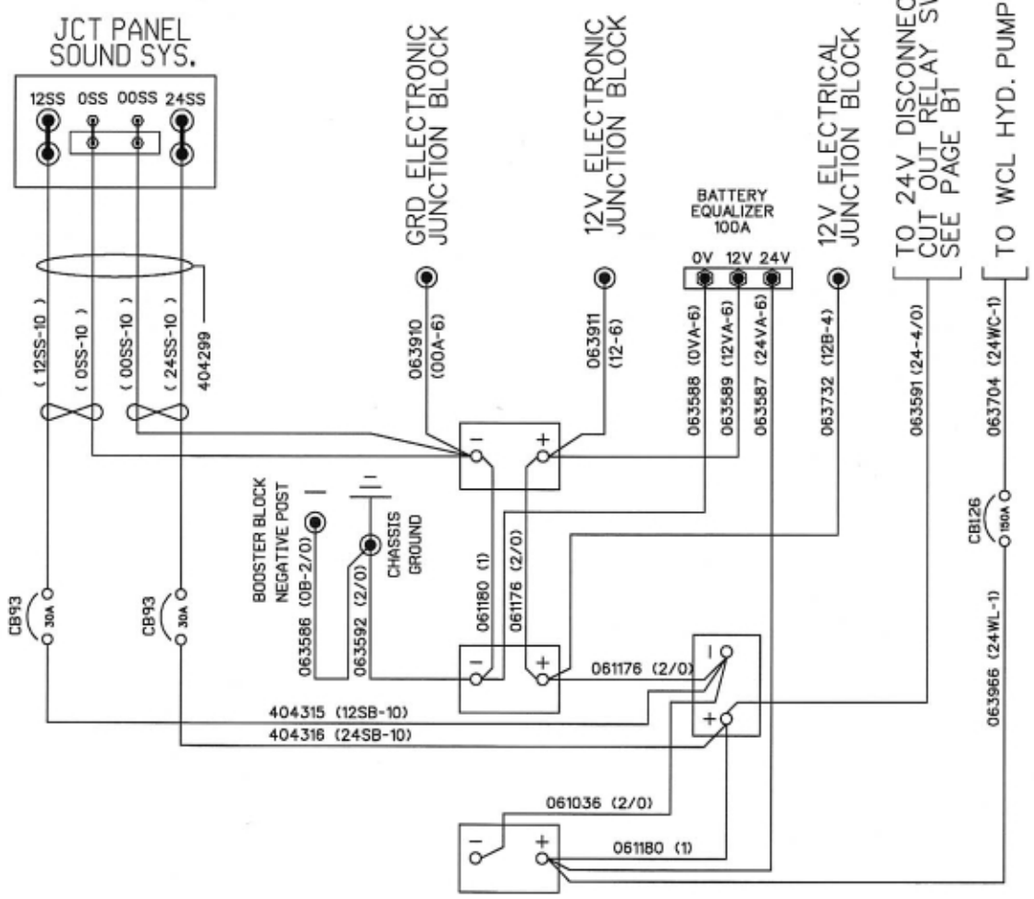

STANDARD BATTERIES

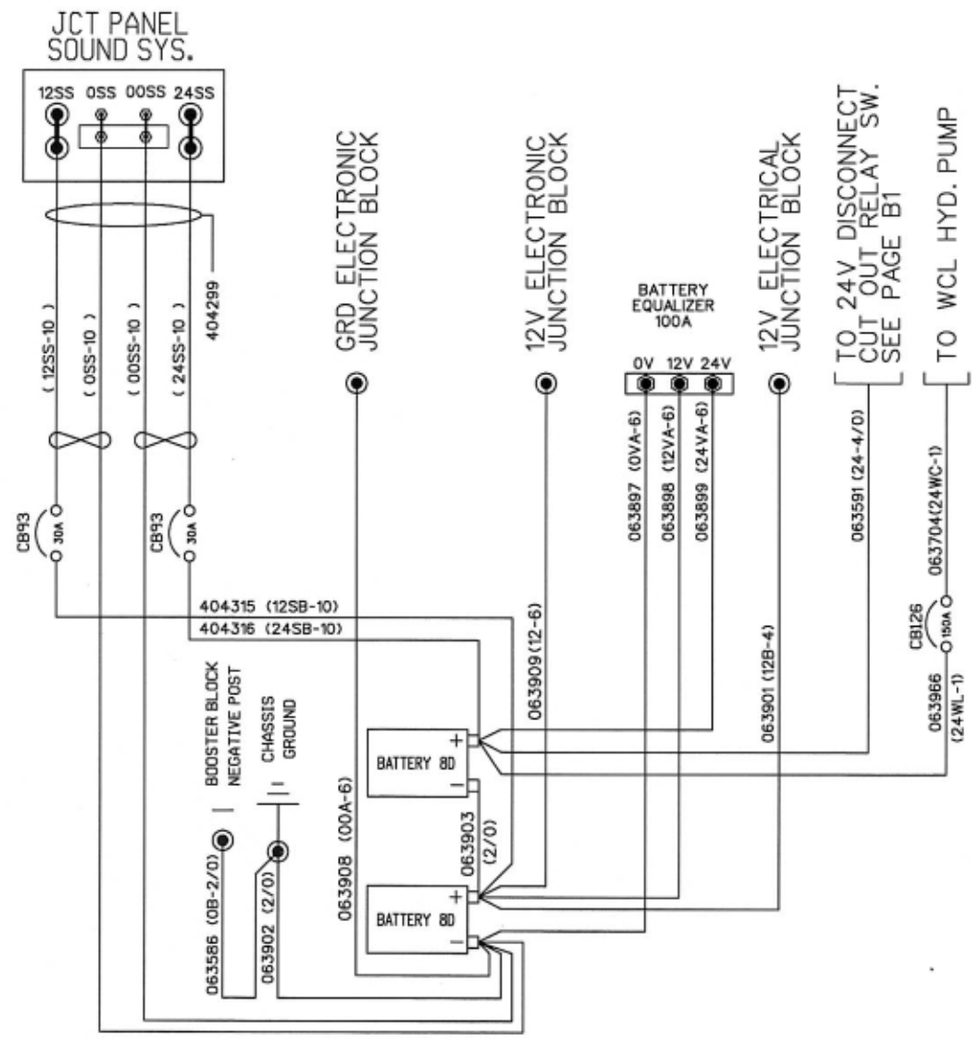

8D BATTERIES

PREVOST	WIRING DIAGRAM	NO: D060882	PAGE: B2	REVISION 00

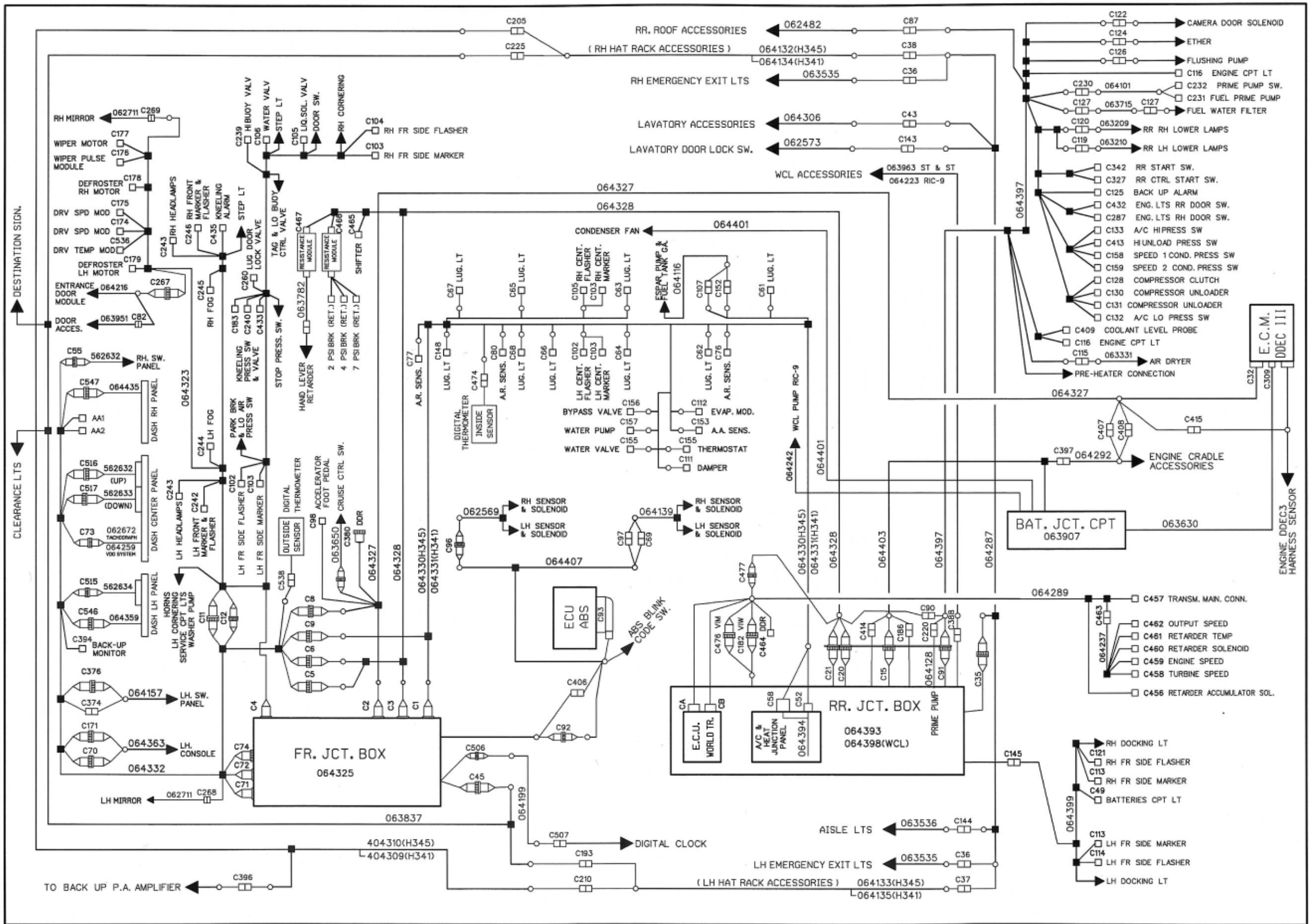

PREVOST	WIRING DIAGRAM	NO: D060882	PAGE: C	REVISION 00

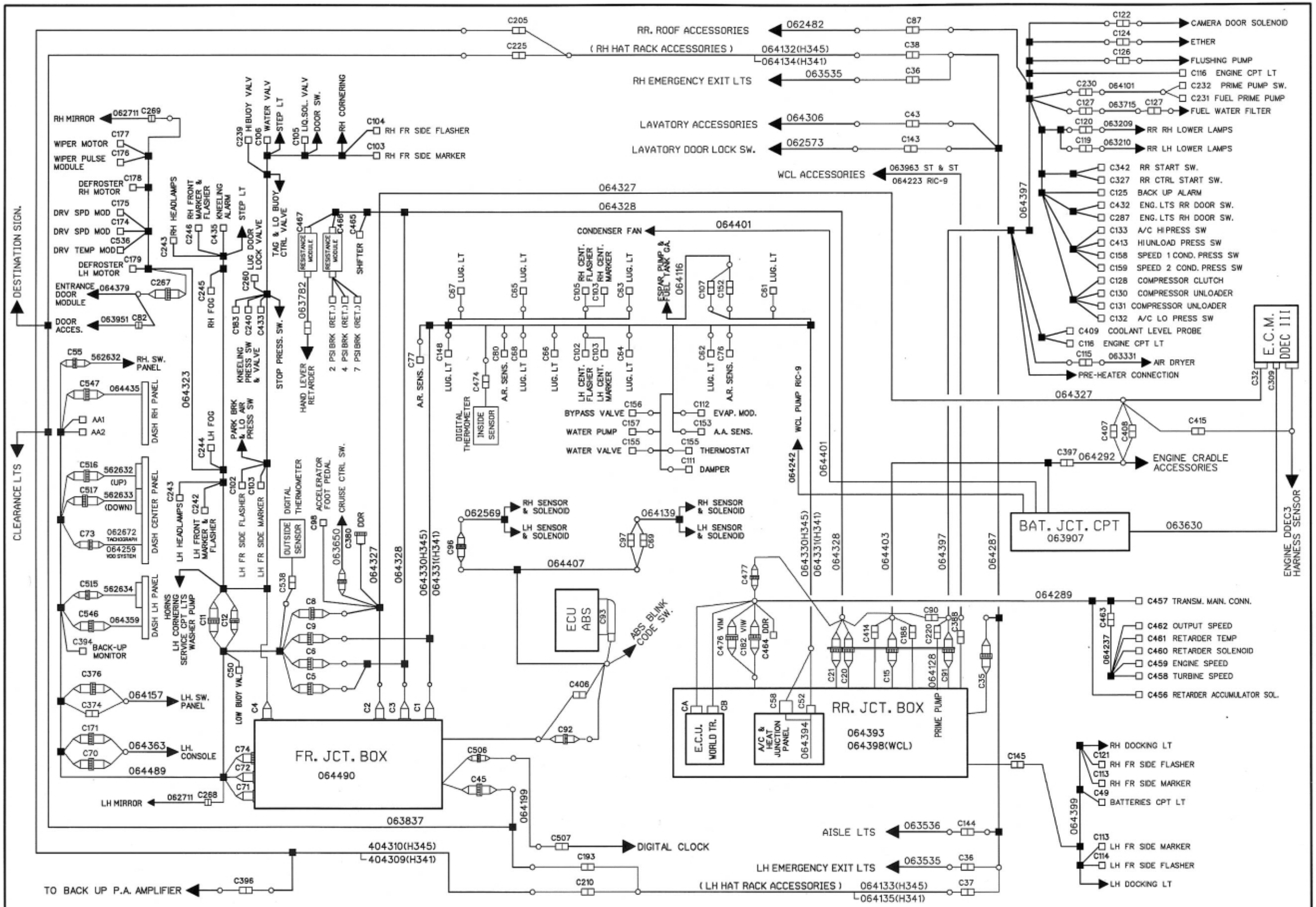

PREVOST	WIRING DIAGRAM	NO: D060882	PAGE: C	REVISION 02

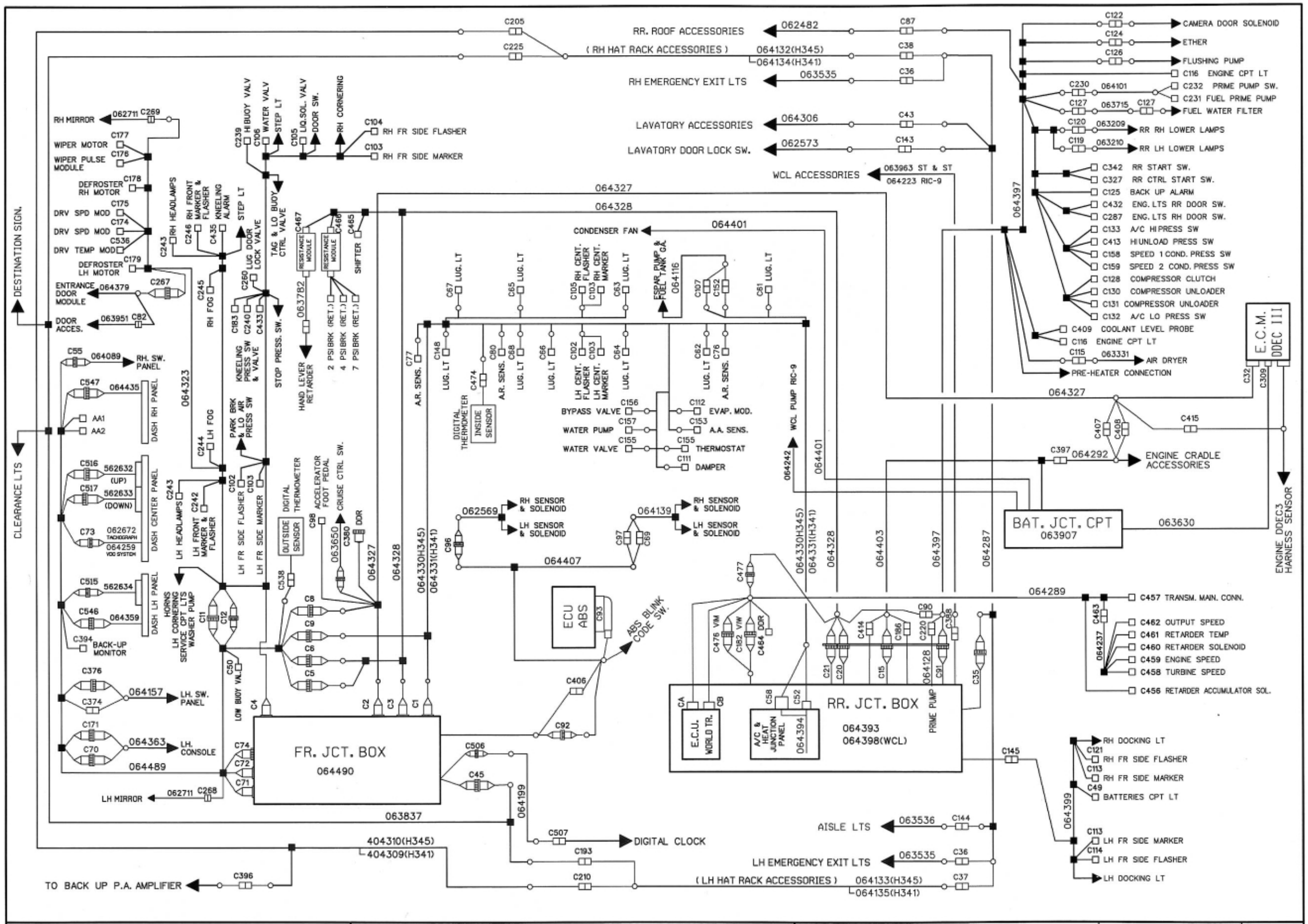

PREVOST	WIRING DIAGRAM	NO: D060882	PAGE: C	REVISION 03

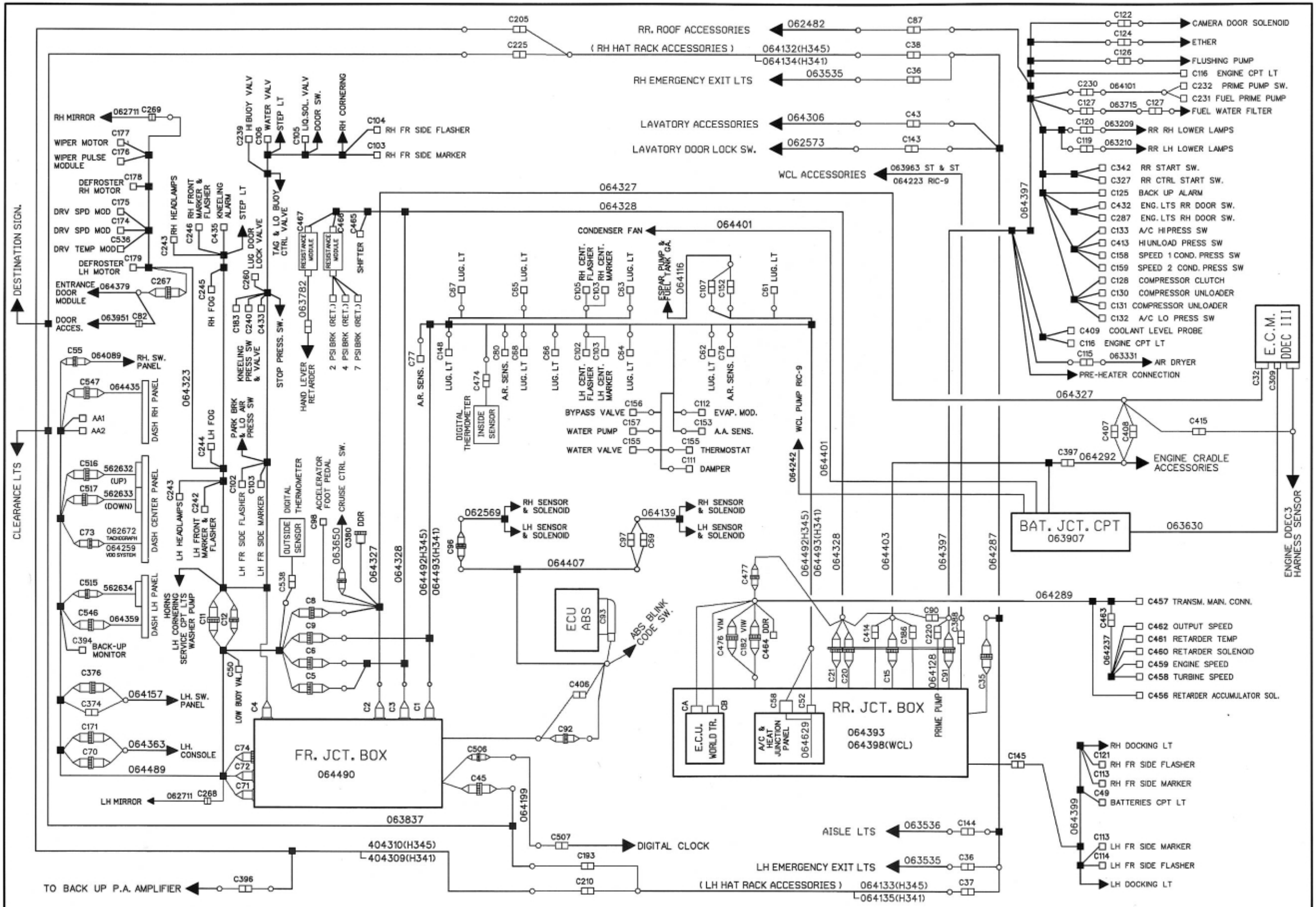

PREVOST	WIRING DIAGRAM	NO: D060882	PAGE: C	REVISION 05

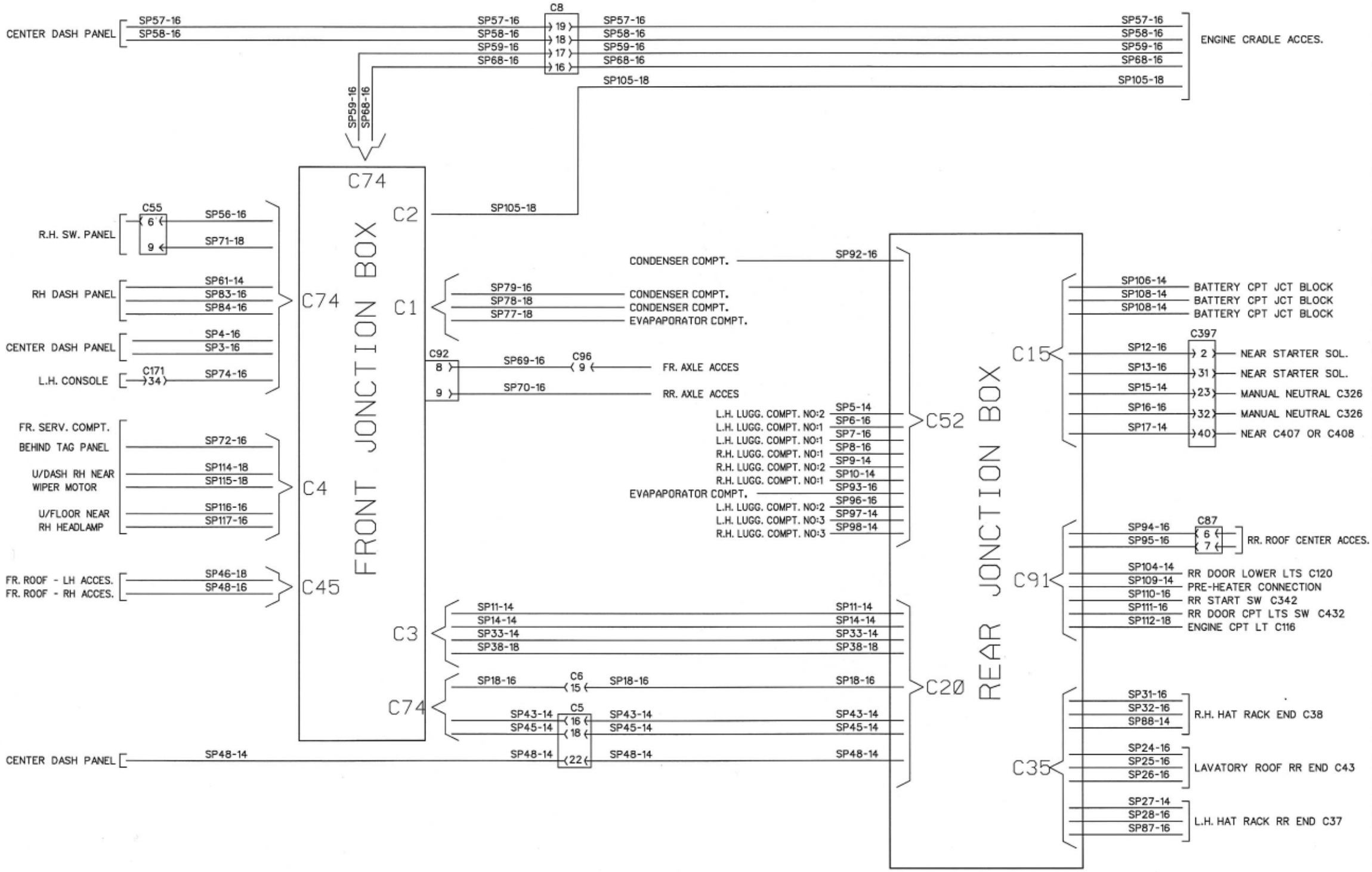

PREVOST	WIRING DIAGRAM	NO: D060882	PAGE: D	REVISION 00

CIRCUIT NUMBER CODE

No.	DESCRIPTION
B A	INTERIOR LTS-110V FLUORESCENT
B B	INTERIOR LTS-110V FLUORESCENT
D 1	SOUND SYSTEM-FR RH SPEAKER
D 2	SOUND SYSTEM-FR RH SPEAKER
D 3	SOUND SYSTEM-FR RH SPEAKER
D 4	SOUND SYSTEM-RR RH SPEAKER
D 5	SOUND SYSTEM-RR RH SPEAKER
D 6	SOUND SYSTEM-RR RH SPEAKER
D 7	SOUND SYSTEM-RR RH SPEAKER
D 8	SOUND SYSTEM-RR RH SPEAKER
D 3 4	SOUND SYSTEM-RR RH SPEAKER
D 6 7	SOUND SYSTEM-RR RH SPEAKER
G 1	SOUND SYSTEM-FR LH SPEAKER
G 2	SOUND SYSTEM-FR LH SPEAKER
G 3	SOUND SYSTEM-FR LH SPEAKER
G 4	SOUND SYSTEM-RR LH SPEAKER
G 5	SOUND SYSTEM-RR LH SPEAKER
G 6	SOUND SYSTEM-RR LH SPEAKER
G 7	SOUND SYSTEM-RR LH SPEAKER
G 8	SOUND SYSTEM-RR LH SPEAKER
G 3 4	SOUND SYSTEM-RR LH SPEAKER
G 6 7	SOUND SYSTEM-RR LH SPEAKER
L 1 A	INTERIOR LTS-110V FLUORESCENT
L 1 B	INTERIOR LTS-110V FLUORESCENT
L 2 A	INTERIOR LTS-110V FLUORESCENT
L 2 B	INTERIOR LTS-110V FLUORESCENT
L 8	ENG. BLK & WATER TANK-HEATER
L 9	ENG. BLK & WATER TANK-HEATER
L 0	110V RECEPTACLE- 110V FLUOR.
L 1	110V RECEPTACLE- 110V FLUOR.
L 2	110V RECEPTACLE- 110V FLUOR.
R A	INTERIOR LTS-110V FLUORESCENT
R B	INTERIOR LTS-110V FLUORESCENT
S H 1	SHIELD CHASSIS GRD
S H 2	SHIELD CHASSIS GRD
S H 3	SHIELD CHASSIS GRD
S H 4	SHIELD CHASSIS GRD
S P 2	SPARE-FJB TO FR SERV CPT
S P 3	SPARE-FJB TO CENTER DASH
S P 4	SPARE-FJB TO CENTER DASH
S P 5	SPARE-RJB TO LUGG CPT #2
S P 6	SPARE-RJB TO LUGG CPT #1
S P 7	SPARE-RJB TO LUGG CPT #1
S P 8	SPARE-RJB TO LUGG CPT #1
S P 9	SPARE-RJB TO LUGG CPT #2
S P 10	SPARE-RJB TO LUGG CPT #1
S P 11	SPARE-FJB TO RJB
S P 12	SPARE-RJB TO ENGINE
S P 13	SPARE-RJB TO ENGINE
S P 14	SPARE-FJB TO RJB

No.	DESCRIPTION
S P 15	SPARE-RJB TO ENGINE
S P 16	SPARE-RJB TO ENGINE
S P 17	SPARE-RJB TO ENGINE
S P 18	SPARE-FJB TO RJB
S P 24	SPARE-RJB TO LAVATORY ROOF
S P 25	SPARE-RJB TO LAVATORY ROOF
S P 26	SPARE-RJB TO LAVATORY ROOF
S P 27	SPARE-RJB TO LH HAT RACK
S P 28	SPARE-RJB TO LH HAT RACK
S P 31	SPARE-RJB TO RH HAT RACK
S P 32	SPARE-RJB TO RH HAT RACK
S P 33	SPARE-FJB TO RJB
S P 38	SPARE-FJB TO RJB
S P 43	SPARE-FJB TO RJB
S P 45	SPARE-FJB TO RJB
S P 46	SPARE-RJB TO LH FR ROOF
S P 48	SPARE-RJB TO DASH CENTER PANEL
S P 56	SPARE-ENGINE TO RH SW PANEL
S P 57	SPARE-DASH CENTER PANEL TO ENG.
S P 58	SPARE-DASH CENTER PANEL TO ENG.
S P 59	SPARE-FJB TO ENGINE
S P 61	SPARE-FJB TO DASH RH PANEL
S P 68	SPARE-FJB TO ENGINE
S P 69	SPARE-FJB TO FR AXLE
S P 70	SPARE-FJB TO FR AXLE
S P 71	SPARE-FJB TO RH SW PANEL
S P 72	SPARE-FJB TO FR SERV CPT
S P 74	SPARE-FJB TO LH CONSOLE
S P 77	SPARE-FJB TO EVAPORATOR CPT
S P 78	SPARE-FJB TO CONDENSER CPT
S P 79	SPARE-FJB TO CONDENSER CPT
S P 87	SPARE-RJB TO LH HAT RACK
S P 88	SPARE-RJB TO RH HAT RACK
S P 92	SPARE-RJB TO CONDENSER CPT
S P 93	SPARE-RJB TO EVAPORATOR CPT
S P 94	SPARE-RJB TO RR ROOF
S P 95	SPARE-RJB TO RR ROOF
S P 96	SPARE-RJB TO LUGG CPT #2
S P 97	SPARE-RJB TO LUGG CPT #3
S P 98	SPARE-RJB TO LUGG CPT #3
S P 104	SPARE-RJB TO ENGINE CPT
S P 105	SPARE-FJB TO ENGINE
S P 106	SPARE-RJB TO BATT. CPT.
S P 107	SPARE-RJB TO BATT. CPT.
S P 108	SPARE-RJB TO BATT. CPT.
S P 109	SPARE-RJB TO ENGINE CPT.
S P 110	SPARE-RJB TO ENGINE CPT.
S P 111	SPARE-RJB TO ENGINE CPT.
S P 112	SPARE-RJB TO ENGINE CPT.
S P 114	SPARE-FJB TO U/DASH WIPER

No.	DESCRIPTION
S P 115	SPARE-FJB TO U/DASH WIPER
S P 116	SPARE-FJB TO U/DASH FLOOR
S P 117	SPARE-FJB TO U/DASH FLOOR
W C	A/C & HEAT SYST-EVAP CTR SIGN
Y C	INTERIOR LTS-110V FLUORESCENT
Y D	INTERIOR LTS-110V FLUORESCENT
0	BC - BAT. CPT CHASSIS GRD
0	CONDENSER CPT GRD
0	RS - RR JCT BOX RLY GRD
0	GALLEY GRD
0 A	BC - SHIELD GRD
0 A	RS - RR JCT BOX RLY GRD
0 A	FRS - FR ROOF ACCES. GRD
0 A	RS - LUG. CPT ACCES. GRD
0 A A	RS - VOLTAGE REGULATOR GRD
0 B	EC - ENGINE GRD
0 B	FRS - FR ROOF HEAT WIND GRD
0 B	RS - LUG. CPT ACCES. GRD
0 B E	RJB - BAT. EQUAL. BAT GRD
0 C	EC - STARTER MOTOR GRD
0 C	FS - SERV. CPT ACCES. GRD
0 C	BC - FAN CONDENSER GRD
0 C R	24V DISC. SW. RLY GRD SIGNAL
0 C S	24V DISC. SW. RLY GRD SIGNAL
0 C 1	FS - SERV. CPT ACCES. GRD
0 C 2	FS - SERV. CPT ACCES. GRD
0 C 3	FS - SERV. CPT ACCES. GRD
0 D	BC - FAN CONDENSER GRD
0 D	RS - HAT RACK ACCES. LH GRD
0 D F	RS - RR SIDE FLASH & MARK GRD
0 D R	RS - RJB DOCKING LT RESISTORS
0 E	RS - HAT RACK ACCES. LH GRD
0 F	RS - HAT RACK ACCES. RH GRD
0 G	RS - HAT RACK ACCES. RH GRD
0 H	RS - LAVATORY ACCES. GRD
0 J	FS - LH CONSOLE SW GRD
0 J	RS - RR ROOF ACCES. GRD
0 K	RS - RR ROOF ACCES. GRD
0 K	RS - RJB A/C JCT PANEL GRD
0 L	FS - FR SERVICE CPT LTS GRD
0 L 1	FS - FR SERVICE CPT LTS GRD
0 L 2	FS - FR SERVICE CPT LTS GRD
0 L 3	FS - FJB GRD
0 L 4	FS - FJB GRD
0 L 5	FS - CIGAR LIGHTER
0 L	RS - ENGINE CPT ACCES. GRD
0 L	ENTRANCE DOOR (SEDAN) GRD
0 L H	RS - RR END LAMPS LH GRD
0 M	FS - ELECTRICAL MOTOR GRD
0 M 3	FS - ELECTRICAL MOTOR GRD

No.	DESCRIPTION
0 M 4	FS - ELECTRICAL MOTOR GRD
0 M 5	FS - ELECTRICAL MOTOR GRD
0 M 6	FS - FJB GRD
0 M 7	FS - ELECTRICAL MOTOR GRD
0 M	RS - ENGINE CPT ACCES. GRD
0 M R	24V DISC. SW. RLY GRD SIGNAL
0 M S	24V DISC. SW. RLY GRD SIGNAL
0 N	RS - ENGINE CPT ACCES. GRD
0 P	RS - ENGINE CPT ACCES. GRD
0 R	FS - SOUND SYS. JCT PANEL GRD
0 R	RS - RJB GRD
0 R	RS - ENGINE CPT ACCES. GRD
0 R E	RADIO &CTRL HEAD CHASSIS GRD
0 R H	RS - RR END LAMPS RH GRD
0 S 2	SOUND SYSTEM RADIO GRD
0 S 3	SOUND SYSTEM VIDEO GRD
0 S S	SOUNS SYSTEM BATT. GRD
0 T	FS - DASH ACCES. GRD
0 T 1	FS - DASH ACCES. GRD
0 T 2	FS - DASH ACCES. GRD
0 T 3	FS - DASH ACCES. GRD
0 T 4	FS - DASH ACCES. GRD
0 V	RR JCT BOX CPT GRD STUD
0 V A	BATTERY TO EQUALISER 0V
0 W	FS - HEATED WINDSHIELD
0 W	RS - RR JCT BOX (WCL) GRD
0 W C	RS - RR JCT BOX GRD (WCL)
0 X	RS - RR JCT BOX GRD
0 Y	ABS FR JCT BOX CPT GRD STUD
0 Y	RR JCT BOX GRD
0 Y 1	ABS FR JCT BOX CPT GRD STUD
0 Z	RR JCT BOX CPT GRD STUD
0 0	FJB & RJB BATT. GRD
0 0 A	FBG - T.T.LT. MODULES BATT. GRD
0 0 Y	FS - ABS MODULLE BATT. GRD
0 0 S S	SOUND SYSTEM BATT. GRD
1	TACHO SYSTEM - RPM SIGNAL +
2 A	A/C & HEAT SYSTEM-COOL 1 SIGN
2 B	A/C & HEAT SYSTEM-COOL SIGN
2 H	A/C & HEAT SYSTEM-HI PRESS SW
2 H L	A/C & HEAT SYSTEM-LO & HI PRESS SW
2 L	A/C & HEAT SYSTEM-LO PRESS SW
4	HOSTESS & PASSENGER CHIME
4 A	HOSTESS & PASSENGER CHIME
4 B	PASSENGER CHIME
4 C	HOSTESS CHIME
5	INTERIOR LTS-AISLE & EMERG. EXIT
5	UPPER WINDSHIELD DEFROSTER
5 D	UPPER WINDSHIELD DEFROSTER
5 E	UPPER WINDSHIELD DEFROSTER

CIRCUIT NUMBER CODE

No.	DESCRIPTION
5 N	INTERIOR LTS-EMERGENCY EXIT
5 N C	SPEED SIGNAL LOWER 5MPH
5 N O	SPEED SIGNAL HIGHER 5MPH
6	INTERIOR LTS-AISLE
7 B	ENTRANCE DOOR (SEDAN)
7 D	ENTRANCE DOOR (SEDAN)
7 D A	ENTRANCE DOOR (SEDAN)
9	INTERIOR LTS-ENGINE CPT
9 A	INTERIOR LTS-ENGINE CPT
9 B	INTERIOR LTS-ENGINE CPT
9 E	INTERIOR LTS-FR SERVICE CPT
9 F	INTERIOR LTS-FR SERVICE CPT
1 0	INTERIOR LTS-LUGGAGE CPT
1 0 A	INTERIOR LTS-LUGGAGE CPT
1 0 B	INTERIOR LTS-LUGGAGE CPT
1 0 D	INTERIOR LTS-LUGGAGE CPT
1 0 F	INTERIOR LTS-LUGGAGE CPT
1 0 H	INTERIOR LTS-LUGGAGE CPT
1 0 K	INTERIOR LTS-LUGGAGE CPT
1 0 R	INTERIOR LTS-LUGGAGE DOOR AJAR
1 1	FR DESTINATION SIGN
1 1 A	FR DESTINATION SIGN
1 1 B	FR DESTINATION SIGN
1 1 C	FR DESTINATION SIGN
1 1 D	FR DESTINATION SIGN
1 1 E	FR DESTINATION SIGN
1 1 K	FR DESTINATION SIGN
1 2	12V BAT ELECTRONIC JCT BLOCK
1 2	BAT CPT 12V BATTERY
1 2 A	FR JCT BOX 12V DISC SW
1 2 A	RR JCT BOX 12V DISC SW
1 2 B	12V BAT ELECTRICAL JCT BLOCK
1 2 B	RR JCT BOX 12V DISC SW
1 2 B	FR JCT BOX 12V DISC SW
1 2 B E	BAT. EQUALIZER MONITOR
1 2 C	FR JCT BOX 12V DISC SW
1 2 C	RR JCT BOX 12V DISC SW
1 2 D	BAT CPT 12V BATTERY
1 2 E	FR JCT BOX 12V DISC SW
1 2 E	RR JCT BOX 12V DISC SW
1 2 F	BAT CPT 12V FJB & IC
1 2 F	FR JCT BOX 12V DISC SW
1 2 F	RR JCT BOX 12V DISC SW
1 2 G	FR JCT BOX 12V DISC SW
1 2 J	FR JCT BOX 12V DISC SW
1 2 I	12V IGNITION DISTRIBUTION
1 2 I	RR JCT BOX 12V IGNITION
1 2 I A	12V IGNITION DISTRIBUTION
1 2 I A	FR JCT BOX 12V IGNITION
1 2 I B	FR JCT BOX 12V IGNITION

No.	DESCRIPTION
1 2 I F	FR JCT BOX 12V IGNITION
1 2 P	LH CONSOLE POWER OUTLET
1 2 R	BAT CPT 12V DISC RLY TO RJB
1 2 R	MEMORY BATTERY RADIO
1 2 S	SOUND SYSTEM 12V RADIO
1 2 S 1	SOUND SYSTEM 12V RADIO
1 2 S 2	SOUND SYSTEM 12V RADIO
1 2 S B	SOUND SYSTEM 12V FEEDING
1 2 S S	SOUND SYSTEM 12V FEEDING
1 2 V A	BATTERY TO EQUALIZER 12V
1 2 V D	12V HOT WIRE DISTRIBUTION
1 2 V F	BAT CPT 12V FJB & IC
1 2 V I	12V IGNITION DISTRIBUTION
1 2 V R	BAT CPT 12V DISC RLY TO RJB
1 2 W	12V BATTERY DDEC III
1 2 W	ENTRANCE DOOR (SEDAN)
1 2 W A	ENTRANCE DOOR (SEDAN)
1 2 X	FR JCT BOX 12V DISC SW
1 2 X 2	FR JCT BOX 12V DISC SW
1 2 Y	FR JCT BOX 12V DISC SW
1 3 A	ALARM & SIGNAL-LO AIR PRIM.
1 3 B	ALARM & SIGNAL-LO AIR SEC.
1 4	LAVATORY-FLUSHING PUMP
1 4 A	LAVATORY-FLUSHING PUMP
1 5	EXTERIOR LTS-MULTI FUNC LEVEL
1 5 A	WIPER & WASHER UPPER WINDSHIELD
1 6	SPEED - SIGNAL +
1 6 A	SPEED - SIGNAL +
1 6 T	SPEED - SIGNAL +
1 7	EXTERIOR LTS-FLASHER UNIT
1 7 A	EXTERIOR LTS-FLASHER UNIT
1 9	DIFFERENTIAL OIL TEMP
2 0	SPEED - SIGNAL -
2 0 T	SPEED - SIGNAL -
2 0 W	SPEED - SIGNAL -
2 1	EXTERIOR LTS-DIRECTIONNAL LH
2 1 A	EXTERIOR LTS-DIRECTIONNAL LH
2 1 B	EXTERIOR LTS-HAZARD
2 1 C	EXTERIOR LTS-CORNERING LH
2 1 H	EXTERIOR LTS-DIRECTIONNAL LH
2 1 K	EXTERIOR LTS-CORNERING
2 1 N	EXTERIOR LTS-CORNERING LH
2 1 P	EXTERIOR LTS-CORNERING LH
2 3	EXTERIOR LTS-DIRECTIONNAL RH
2 3	EXTERIOR LTS-DIRECTIONNAL RH
2 3 A	EXTERIOR LTS-DIRECTIONNAL RH
2 3 B	EXTERIOR LTS-DIRECTIONNAL RH
2 3 C	EXTERIOR LTS-CORNERING RH
2 3 N	EXTERIOR LTS-CORNERING RH
2 3 P	EXTERIOR LTS-CORNERING RH

No.	DESCRIPTION
2 4	BAT CPT 24V BATTERY
2 4	FR JCT BOX 24V DISC SW
2 4 A	BOOSTER BLOCK 24V DISC SW
2 4 A	FR JCT BOX 24V DISC SW
2 4 A	RR JCT BOX 24V DISC SW
2 4 B	24V STARTER RLY FEEDING
2 4 B	FR JCT BOX 24V DISC SW
2 4 B	RR JCT BOX 24V DISC SW
2 4 B E	RJB CPT-BAT EQ MONITOR HOT WIRE
2 4 C	FR JCT BOX 24V DISC SW
2 4 C	RR JCT BOX 24V DISC SW
2 4 D	BAT CPT 24V HOT WIRE
2 4 D	FR JCT BOX 24V HOT WIRE
2 4 D	RR JCT BOX 24V HOT WIRE
2 4 D A	A/C JCT BOX 24V HOT WIRE
2 4 E	BAT CPT 24V DISC SW
2 4 E	FR JCT BOX 24V DISC SW
2 4 E	RR JCT BOX 24V DISC SW
2 4 F	FR JCT BOX 24V DISC SW
2 4 F	RR JCT BOX 24V DISC SW
2 4 G	FR JCT BOX 24V DISC SW
2 4 G	RR JCT BOX 24V DISC SW
2 4 H	FR JCT BOX 24V DISC SW
2 4 H	RR JCT BOX 24V DISC SW
2 4 I	FR JCT BOX 24V IGNITION
2 4 I	RR JCT BOX 24V IGNITION
2 4 I A	FR JCT BOX 24V IGNITION
2 4 I A	RR JCT BOX 24V IGNITION
2 4 I B	FR JCT BOX 24V IGNITION
2 4 I B	RR JCT BOX 24V IGNITION
2 4 I C	FR JCT BOX 24V IGNITION
2 4 P	FR JCT BOX 24V DISC SW
2 4 S	24V DISC SW RLY SIGNAL
2 4 S 1	SOUND SYSTEM 24V AMPLIFIER
2 4 S 2	SOUND SYSTEM 24V AMPLIFIER
2 4 S 3	SOUND SYSTEM 24V VIDEO
2 4 S 4	SOUND SYSTEM 24V VIDEO
2 4 S B	SOUND SYSTEM 24V FEEDING
2 4 S S	SOUND SYSTEM 24V FEEDING
2 4 T	RR JCT BOX 24V DISC SW
2 4 V 2	RR JCT BOX 24V DISC SW
2 4 V 3	RR JCT BOX 24V DISC SW
2 4 V 4	RR JCT BOX 24V DISC SW
2 4 V 5	RR JCT BOX 24V DISC SW
2 4 V D	24V HOT WIRE DISTRIBUTION
2 4 V F	BAT CPT 24V SW TO FJB & IC
2 4 V A	BATTERY TO EQUALIZER 24V
2 4 V I	RR JCT BOX 24V IGNITION
2 4 V R	BAT CPT 24V DISC SW TO RJB
2 4 W	RR JCT BOX 24V DISC SW (WCL)

No.	DESCRIPTION
2 4 W C	BATT.CPT TO HYD. PUMP (WCL)
2 4 W L	24V BATTERY-HYD. PUMP (WCL)
2 5	12VAC GEN RLY ON SIGNAL
2 5	12VAC GEN RLY ON SIGNAL
2 5 A	NOT GENERATOR-WARNING LT
2 5 B	EXTERIOR LTS-DAYTIME RUN LTS
2 6	CIGAR LIGHTER
2 6	DRIVER'S WINDOW LIFTER
2 6 B	DRIVER'S WINDOW LIFTER
2 6 C	DRIVER'S WINDOW LIFTER
2 7	LAVATORY-EMERGENCY SONALERT
2 8 A	A/C & HEAT SYSTEM-HI PRESSURE
2 9	A/C & HEAT SYSTEM-DRIVER'S HTR
2 9 A	A/C & HEAT SYSTEM-DRIVER'S HTR
2 9 B	A/C & HEAT SYSTEM-DRIVER'S HTR
3 0 A	GALLEY
3 1 A	A/C & HEAT SYSTEM-UNLOADER
3 1 B	A/C & HEAT SYSTEM-UNLOADER
3 1 B	WIPER & WASHER SYSTEM
3 1 C	WIPER & WASHER SYSTEM
3 1 D	WIPER & WASHER SYSTEM
3 1 E	WIPER & WASHER SYSTEM
3 1 J	WIPER & WASHER SYSTEM
3 1 X	WIPER & WASHER SYSTEM
3 2	EXTERIOR LTS-BACK-UP
3 2 B	EXTERIOR LTS-BACK-UP
3 2 C	BACK-UP PWR & SIGNAL
3 2 D	BACK-UP ALARM
3 2 F	BACK-UP MONITOR
3 5	ENTRANCE DOOR (SEDAN)
3 5 B	ENTRANCE DOOR (SEDAN)
3 5 B B	ENTRANCE DOOR (SEDAN)
3 5 D	ENTRANCE DOOR (SEDAN)
3 6	JACOB BRAKE SYSREM
3 6 A	JACOB BRAKE SYSREM
3 8	INTERIOR LTS-24V FLUORESCENT
3 8 A	INTERIOR LTS-24V FLUORESCENT
3 8 C	INTERIOR LTS-24V FLUORESCENT
3 8 D	INTERIOR LTS-24V FLUORESCENT
3 9	INTERIOR LTS-24V LH CONSOLE SW
3 9 A	INTERIOR LTS-DRIVER"S LTS
4 1	A/C & HEAT SYSTEM-COND FAN MOT
4 1 A	A/C & HEAT SYSTEM-COND FAN MOT
4 1 B	A/C & HEAT SYSTEM-COND FAN MOT
4 2	A/C & HEAT SYSTEM-COND FAN MOT
4 2 A	A/C & HEAT SYSTEM-COND FAN MOT
4 4	EXTERIOR LTS-FOG
4 4 A	EXTERIOR LTS-FOG
4 4 B	EXTERIOR LTS-FOG
4 4 C	EXTERIOR LTS-FOG & HAZARD

CIRCUIT NUMBER CODE

No.	DESCRIPTION
4 5 B	A/C & HEAT SYSTEM-HEAT SIGN
4 5 D	A/C & HEAT SYSTEM-WATER VALVE
4 5 E	A/C & HEAT SYSTEM-HEAT 1 SIGN
4 5 G	A/C & HEAT SYSTEM-DRIVER'S HTR
4 5 H	A/C & HEAT SYSTEM-DRIVER'S HTR
4 5 W	A/C & HEAT SYSTEM-COND. DOOR AJAR
4 6	EXTERIOR LTS-MARKER
4 6 A	EXTERIOR LTS-MARKER
4 6 B	EXTERIOR LTS-MARKER
4 6 B	EXTERIOR LTS-MARKER
4 6 C	EXTERIOR LTS-MARKER
4 7	A/C & HEAT SYSTEM-DRIVER'S HTR
4 8	ENTRANCE DOOR (SEDAN)
4 8 A	ENTRANCE DOOR (SEDAN)
4 9	ENTRANCE DOOR (SEDAN)
4 9 A	ENTRANCE DOOR (SEDAN)
5 0	AIR DRYER
5 2	ALARM & SIGNAL-ELEC. HORN
5 2 A	ALARM & SIGNAL-ELEC. HORN
5 3	ALARM & SIGNAL-ELEC. HORN
5 3 A	WIPER & WASHER SYSTEM
5 3 B	WIPER & WASHER SYSTEM
5 3 C	WIPER & WASHER SYSTEM
5 3 E	WIPER & WASHER SYSTEM
5 3 J	WIPER & WASHER SYSTEM
5 5	EXTERIOR LTS-HI BEAM
5 7	EXTERIOR LTS-HI BEAM
5 7 A	A/C & HEAT SYSTEM-WATER PUMP
5 7 A	EXTERIOR LTS-HI BEAM
5 7 B	A/C & HEAT SYSTEM-WATER PUMP
5 7 C	PRE-HEAT WATER HEATER
5 7 C A	A/C & HEAT SYSTEM-HEAT SIGN
5 7 C C	A/C & HEAT SYSTEM-HEAT SIGN
5 8	EXTERIOR LTS-LO BEAM
5 8 A	EXTERIOR LTS-LO BEAM
5 8 B	EXTERIOR LTS-LO BEAM
5 8 E	EXTERIOR LTS-LO BEAM
5 9 A	JACOB BRAKE SYSTEM
6 1	EXTERIOR LTS-24V FEED SW
6 1 A	EXTERIOR LTS-HEAD SIGNAL
6 2	LAVATORY-OCCUPIED LT
6 2 A	LAVATORY-FLUOR LT
6 2 B	LAVATORY-FLUOR LT
6 2 E	LAVATORY-OCCUP & FLUOR LT
6 3	EXTERIOR LTS-CLEARANCE
6 3 A	EXTERIOR LTS-CLEARANCE
6 3 B	EXTERIOR LTS-CLEARANCE
6 3 C	EXTERIOR LTS-MARKER SIGNAL
6 3 D	EXTERIOR LTS-MARKER & TAIL
6 3 E	EXTERIOR LTS-CLEARANCE

No.	DESCRIPTION
6 3 F	EXTERIOR LTS-MARKER BLINKER
6 3 H	EXTERIOR LTS-TAIL
6 7	A/C & HEAT SYSTEM
6 7 A	A/C & HEAT SYSTEM
6 7 B	A/C & HEAT SYSTEM
6 7 C	A/C & HEAT SYSTEM & HEAT WINDS.
6 7 K	A/C & HEAT SYSTEM-COND FAN CTR
6 7 L	A/C & HEAT SYSTEM-COND FAN CTR
6 7 V	A/C & HEAT SYSTEM-WATER VALVE
7 0	INTERIOR LTS-HAT RACK & RR RUN.
7 2	SUN VISOR-FEEDING
7 2 A	SUN VISOR-RH
7 2 B	SUN VISOR-RH
7 2 C	SUN VISOR-LH
7 2 D	SUN VISOR-LH
7 3	LAVATORY-FEEDING
7 4	INTERIOR LTS-READING RH
7 4 A	INTERIOR LTS-READING RH
7 4 D	INTERIOR LTS-READING SIGNAL
7 5	INTERIOR LTS-READING LH
7 5 A	INTERIOR LTS-READING LH
7 6	FUEL TANK GAUGE
7 6 B	LOW FUEL LT & ETHER COLD START
7 6 C	LOW FUEL LT
7 6 P	FUEL PRIME PUMP
7 6 M	FUEL PRIME PUMP
7 7	A/C & HEAT SYSTEM-HI PRESSURE
7 7 A	A/C & HEAT SYSTEM-DRIVER'S HTR
7 7 B	A/C & HEAT SYSTEM-COMPRESSOR
7 7 C	A/C & HEAT SYSTEM-COMPRESSOR
7 7 H	A/C & HEAT SYSTEM-COMPRESSOR
8 1	EXTERIOR LTS-STOP SW
8 2	EXTERIOR LTS-STOP SIGNAL
8 2 A	EXTERIOR LTS-STOP SIGNAL
8 2 B	EXTERIOR LTS-STOP LTS
8 2 K	EXTERIOR LTS-STOP PARK BRK
8 2 L	EXTERIOR LTS-LH STOP
8 2 R	EXTERIOR LTS-LH STOP
8 3	ENGINE CTR-KEY SW ACCES SIGN
8 4	ENGINE CTR-KEY SW ACCES SIGN
8 5	ENGINE CTR-KEY SWIGNITION SIGN
8 5	24V IGNITION SIGNAL
8 5 A	24V IGN DASH INSTRUMENTATION
8 5 B	ENGINE CTR-24V IGNITION
8 5 C	PARKING BRAKE SWITCH
8 5 F	ENGINE CTR-ENGINE CTR SW IGN
8 5 F	LO AIR SONALERT
8 5 W	24V IGN ANTI SKID
8 5 X	24V IGN ANTI SKID
8 5 Y	ANTI SKID-WARNING LT

No.	DESCRIPTION
8 6	ENGINE CTR-STARTER SOL SIGN
8 6 A	ENGINE CTR-STARTER SOL SIGN
8 8	ENGINE CTR-RR START SIGNAL
8 9	ENGINE CTR-RR START SIGNAL
9 0 B	A/C & HEAT SYSTEM-COND FAN MOT
9 0 B	ENGINE CTR-MAST KEY SW FEED
9 0 C	A/C & HEAT SYSTEM-COND FAN MOT
9 0 F	CHARG SYST-VOLTAGE REGUL. "B"
9 0 H	A/C & HEAT SYSTEM-EVAP FAN MOT
9 0 J	A/C & HEAT SYSTEM-COND FAN MOT
9 1	PARKING BRAKE SW SIGNAL
9 1 A	DDEC-FAST IDLE SIGNAL
9 1 W	PARK, BRAKE SW SIGN (WCL)
9 2	BATTERY EQUALIZER-CHECK BALANCE
9 3	BATTERY EQUALIZER-CHECK LO/HI
9 5 A	ENGINE BRAKE & RETARDER SYSTEM
9 7	TACHOMETER (-)
1 0 0	INTERIOR LTS-GENERAL
1 0 0 A	INTERIOR LTS-GENERAL
1 0 0 B	INTERIOR LTS-GENERAL
1 0 1	24V STARTER SOL FEEDING
1 0 1	WORLD TRANSM-LO SIGN SOL. LO
1 0 2	24V STARTER TO GENERATOR
1 0 2	WORLD TRANSM-SOL. GRD 1
1 0 2	WORLD TRANSM-SOL. C3
1 0 3	LOW BUOY
1 0 4	WORLD TRANSM-SOL. FORWARD
1 0 5	WORLD TRANSM-RETARDER & SUMP
1 0 5 W	WORLD TRANSM-RETARDER & SUMP
1 0 6	WORLD TRANSM-OIL LEVEL HI
1 0 7	CHARG SYST-VOLTAGE REGUL. "F"
1 0 7	WORLD TRANSM-LOCKUP SOL. HI
1 0 8	WORLD TRANSM-REM. PWR WAKE UP
1 0 9	WORLD TRANSM-RET. SOL. LO
1 1 0	ALARM & SIGNAL-WATER TEMP
1 1 0	WORLD TRANSM-LOCKUP SOL. LO
1 1 1	WORLD TRANSM-SOL. C6
1 1 2	WORLD TRANSM-SPARE OUTPUT (+)
1 1 3	ALARM & SIGNAL-OIL PRESS
1 1 3	WORLD TRANSM-REVERSE WARNING
1 1 4	INTERIOR LTS-DASH LT REGUL.
1 1 4	WORLD TRANSM-SPARE OUTPUT (-)
1 1 4 A	INTERIOR LTS-DASH LT
1 1 4 B	INTERIOR LTS-DASH LT REGUL.
1 1 4 D	INTERIOR LTS-DASH LT REGUL.
1 1 4 E	INTERIOR LTS-DASH LT REGUL.
1 1 5	ALARM & SIGNAL-TAG PRESS
1 1 5	DDEC III-COOLANT LEVEL
1 1 5	WORLD TRANSM-DO NOT SHIFT SIGN
1 1 5 C	DDEC III-COOLANT LEVEL

No.	DESCRIPTION
1 1 5 W	WORLD TRANSM-DO NOT SHIFT SIGN
1 1 6	WORLD TRANSM-LO SIGNAL SOL. HI
1 1 6 B	A/C & HEAT SYSTEM-DRIVER'S HTR
1 1 7	WORLD TRANSM-SPARE INPUT (-)
1 1 7 A	ALARM & SIGNAL-TRANSM OIL TEMP
1 1 7 A	ALARM & SIGNAL-TRANSM OIL TEMP
1 1 8	WORLD TRANSM-SPARE INPUT (+)
1 1 9	WORLD TRANSM-ENG BRK INPUT (+)
1 2 0	WORLD TRANSM-SOL. C1
1 2 1	WORLD TRANSM-SOL. GRD 2
1 2 2	A/C & HEAT SYSTEM-DRIVER'S HTR
1 2 2	A/C & HEAT SYSTEM-FRESH AIR
1 2 2	WORLD TRANSM-SOL. GRD 4
1 2 2 A	A/C & HEAT SYSTEM-FRESH AIR
1 2 3	WORLD TRANSM-NEUTRAL START
1 2 3 A	ALARM & SIGNAL-FIRE DETECTOR
1 2 3 B	ALARM & SIGNAL-FIRE DETECTOR
1 2 4	WORLD TRANSM-THROTTLE (HI)
1 2 5	WORLD TRANSM-RET. INDICATOR
1 2 5	GALLEY LAMP
1 2 5 T	GALLEY LAMP
1 2 5 W	WORLD TRANSM-RET. INDICATOR
1 2 6	KNEELING SYSTEM
1 2 6 A	KNEELING SYSTEM
1 2 6 B	KNEELING SYSTEM
1 2 6 C	KNEELING SYSTEM
1 2 6 D	KNEELING SYSTEM
1 2 6 E	KNEELING SYSTEM
1 2 6 F	KNEELING SYSTEM
1 2 6 G	KNEELING SYSTEM
1 2 6 H	KNEELING SYSTEM
1 2 6 K	KNEELING SYSTEM
1 2 6 P	KNEELING SYSTEM
1 2 6 R	KNEELING SYSTEM
1 2 6 W	5 MPH N.C. SIGNAL (WCL)
1 2 6 S	KNEELING SYSTEM
1 2 6 T	KNEELING SYSTEM
1 2 7	WORLD TRANSM-LUBE PRESS SW.
1 2 7	PRE-HEAT WATER HEATER
1 2 7 A	PRE-HEAT WATER HEATER
1 2 7 B	PRE-HEAT WATER HEATER
1 2 7	WORLD TRANSM-RETARDER FEED SOL.
1 2 7 S	PRE-HEAT WATER HEATER
1 2 7 W	PRE-HEAT WATER HEATER
1 2 8	PRE-HEAT WATER HEATER
1 2 8 A	PRE-HEAT WATER HEATER
1 2 8 B	PRE-HEAT WATER HEATER
1 2 8 W	PRE-HEAT WATER HEATER
1 2 8	WORLD TRANSM-SOL. C2
1 2 9	PRE-HEAT WATER HEATER

CIRCUIT NUMBER CODE

No.	DESCRIPTION
129	WORLD TRANSM-SOL. C5
130	WORLD TRANSM-SOL. GRD 3
131	WORLD TRANSM-SOL. C4
132	WORLD TRANSM-ENG BRK OUTPUT (-)
132W	WORLD TRANSM-ENG BRK OUTPUT (-)
133	GALLEY-HEAT CONTAINERS
133A	GALLEY-HEAT CONTAINERS
133B	GALLEY-HEAT CONTAINERS
133C	GALLEY-HEAT CONTAINERS
133	WORLD TRANSM-RET. ACTUATOR HI
134	GALLEY-HEAT CONTAINERS
134A	GALLEY-HEAT CONTAINERS
134	WORLD TRANSM-RET. APPLY SOL. HI
135	A/C & HEAT SYSTEM-AIR SENSOR
135A	A/C & HEAT SYSTEM-AIR SENSOR
135D	A/C & HEAT SYSTEM-AIR SENSOR
135C	A/C & HEAT SYSTEM-AIR SENSOR
135	WORLD TRANSM-ANALOG GRD
135D	WORLD TRANSM-RETARDER RES MOD
135C	WORLD TRANSM-RETARDER TEMP
136	GALLEY-ACCESSORIES
136	WORLD TRANSM-ECU POWER
136V	WORLD TRANSM-12V BATTERY
136W	WORLD TRANSM-12V BATTERY
136X	WORLD TRANSM-12V BATTERY
137	WORLD TRANSM-RETARDER
137A	MIRROR (SPARTAN & RAMCO)
137B	RR VIEW MIRROR (SPARTAN)
137C	RR VIEW MIRROR (SPARTAN)
137D	RR VIEW MIRROR (SPARTAN)
137E	RR VIEW MIRROR (SPARTAN)
137G	RR VIEW MIRROR (SPARTAN)
138	ABS SYSTEM
138	WORLD TRANSM-RETARDER TEMP
138A	ABS SYSTEM
139	ABS SYSTEM
139	WORLD TRANSM-OUTPUT SPEED HI
140	ABS SYSTEM
140	WORLD TRANSM-OUTPUT SPEED LO
141	ABS SYSTEM
141	WORLD TRANSM-ENGINE SPEED HI
142	ABS SYSTEM
142	WORLD TRANSM-SERIAL COM. A
143	ABS SYSTEM
143	WORLD TRANSM-ECU BATTERY GRD
143A	ABS SYSTEM
143W	WORLD TRANSM-BATTERY GRD
143X	WORLD TRANSM-BATTERY GRD
144	ABS SYSTEM
144	WORLD TRANSM-ECU CHASSIS GRD

No.	DESCRIPTION
144A	ABS SYSTEM
145	ABS SYSTEM
146	ABS SYSTEM
146	WORLD TRANSM-IGNITION SENSE
146W	WORLD TRANSM-12V IGNITION
146X	WORLD TRANSM-12V IGNITION
147	ABS SYSTEM
147	ETHER COLD START
147	WORLD TRANSM-OIL TEMP
147C	ETHER COLD START
148	ABS SYSTEM
148	WORLD TRANSM-OUTPUT SPEED LO
149	ABS SYSTEM
149	WORLD TRANSM-TURBINE SPEED HI
149A	ABS SYSTEM
150	DDEC III-ECM BATTERY GRD
150	WORLD TRANSM-ENGINE SPEED LO
150A	DDEC III-ECM BATTERY GRD
151	ABS SYSTEM
151	DDEC III-ECM BATTERY GRD
151	WORLD TRANSM-SERIAL COM. B
151A	ABS SYSTEM
152	ABS SYSTEM
152A	ABS SYSTEM
153	ABS SYSTEM
153	WORLD TRANSM-SPARE INPUT (-)
154	ABS SYSTEM
154	WORLD TRANSM-ABS RET. INPUT
155	ABS SYSTEM
155	WORLD TRANSM-SPARE INPUT (-)
156	ABS SYSTEM
156	WORLD TRANSM-THROTTLE POS.
156A	ABS SYSTEM
157	ABS SYSTEM
157	WORLD TRANSM-SPEEDO SIGNAL
157A	ABS SYSTEM
157B	ABS SYSTEM
158	WORLD TRANSM-DIMMER
160	ALARM & SIGNAL-TAG PRESS SW
160	WORLD TRANSM-SER. INTERFACE (-)
161	WORLD TRANSM-SIGNAL GRD
161B	WORLD TRANSM-SIGNAL GRD
162	WORLD TRANSM-PRESS. SW C3
163	WORLD TRANSM-RETARDER ENABLE
164	WORLD TRANSM-RET. ACTUATOR SIGN
165	A/C & HEAT SYSTEM-TRANSMITER
165	WORLD TRANSM-OIL LEVEL SIGNAL
165A	A/C & HEAT SYSTEM-TRANSMITER
165B	A/C & HEAT SYSTEM-TRANSMITER
165C	A/C & HEAT SYSTEM-TRANSMITER

No.	DESCRIPTION
165D	A/C & HEAT SYSTEM-TRANSMITER
166B	A/C & HEAT SYSTEM-EVAP. MOD.
167	A/C & HEAT SYSTEM-TEMP. CTR
167A	A/C & HEAT SYSTEM-TEMP. CTR
168	A/C & HEAT SYSTEM-HUMIDISTAT
168	WORLD TRANSM-SER. INTERFACE (+)
168A	A/C & HEAT SYSTEM-HUMIDISTAT
170	LUGGAGE DOOR LOCK
170C	LUGGAGE DOOR LOCK
170E	LUGGAGE DOOR LOCK
170H	LUGGAGE DOOR LOCK
181A	THERMOMETER INSIDE SENSOR
181B	THERMOMETER INSIDE SENSOR
181C	THERMOMETER OUTSIDE SENSOR
181D	THERMOMETER OUTSIDE SENSOR
197	FUEL WATER FILTER
197A	FUEL WATER FILTER
197B	FUEL WATER FILTER
201	WORLD TRANSM-SPARE
202	WORLD TRANSM-SPARE
203	WORLD TRANSM-SPARE
204	WORLD TRANSM-SPARE
205	WORLD TRANSM-SPARE
206	WORLD TRANSM-SPARE
214	WORLD TRANSM-BACK UP SIGNAL
231	NEUTRAL SIGNAL GRD
231A	NEUTRAL COIL RELAY FEED SIGNAL
231W	NEUTRAL SIGNAL GRD (WCL)
240	DDEC III-ECM 12V FEEDING
241	DDEC III-ECM 12V FEEDING
251	DDEC III - PRODRIVER 12V H.W.
253	GALLEY-MICROWAVE
254	GALLEY-12V FRIGO NORCOLD
254A	GALLEY-FRIGO
255	GALLEY-COFEEMAKER
255A	GALLEY-COFEEMAKER
257	WINDSHIELD HEATED
257A	WINDSHIELD HEATED
257B	WINDSHIELD HEATED
257C	WINDSHIELD HEATED
257D	WINDSHIELD HEATED SPARE
257E	WINDSHIELD HEATED SPARE
258	WINDSHIELD HEATED
258A	WINDSHIELD HEATED
259	WINDSHIELD HEATED
259A	WINDSHIELD HEATED
290	FAN CLUTCH RADIATOR
290	FAN CLUTCH RADIATOR
291	FAN CLUTCH RADIATOR SPD 1
292	FAN CLUTCH RADIATOR SPD 2

No.	DESCRIPTION
300	DOOR AJAR MAGN.SW. (WCL)
300A	POWER SYSTEM SW. (WCL)
300B	DOOR AJAR ALARM (WCL)
301	POWER SYSTEM SW. (WCL)
302	DOOR AJAR T.T.LT. (WCL)
302A	DOOR AJAR ALARM SIGN.(WCL)
302B	DOOR AJAR MAGN.SW. (WCL)
303	REMOTE WALL SW. DWN (WCL)
304	REMOTE WALL SW. UP (WCL)
305	PARK. BRAKE SOL. VALVE (WCL)
305A	PARK. BRAKE SAFETY SW. (WCL)
306	CONTROL SYSTEM (WCL RICON)
307	CONTROL SYSTEM (WCL RICON)
308	CONTROL SYSTEM (WCL RICON)
309	CONTROL SYSTEM (WCL RICON)
417	DDEC III-LIMIT SPEED GOVERNOR
419	DDEC III-CHECK ENGINE LIGHT
439	DDEC III-12V IGNITION
440	DDEC III-12V IGNITION
440A	DDEC III-12V IGNITION
451	DDEC III-A/C FAN CLUTCH
505	DDEC III-TACHOMETER DRIVE
509	DDEC III-STOP ENGINE LIGHT
510	DDEC III-FAST IDLE SIGNAL
524	DDEC III-ENGINE BRAKE DISABLE
525	DDEC III-FAST IDLE SIGNAL
528	DDEC III-STOP ENG. OVERRIDE
531	DDEC III-CRUISE CLUTCH RELEASE
541	DDEC III-CRUISE SET SW
543	DDEC III-CRUISE STOP SW CUT IN
544	DDEC III-CRUISE ON/OFF SW
545	DDEC III-CRUISE RESUME SW
555	DDEC III-FAN CLUTCH SPEED# 1
556	DDEC III-VEHICLE SPEED (+)
557	DDEC III-VEHICLE SPEED (-)
563	DDEC III-FAN CLUTCH SPEED# 2
564	DDEC III-DIGITAL OUTPUT
565	DDEC III-ENGINE BRAKE ACTIVE
583	DDEC III-ENGINE BRAKE 4 CYL.
900	DDEC III-DATA LINK (+)
901	DDEC III-DATA LINK (-)
908	DDEC III-HYDRAULIC PWM#1 OUTPUT
916	DDEC III-SENSOR SUPPLY (5VDC)
952	DDEC III-SENSOR RETURN
953	DDEC III-BATTERY GRD
979	DDEC III-ENGINE BRAKE 2 CYL.

CIRCUIT NUMBER CODE

No.	DESCRIPTION	No.	DESCRIPTION	No.	DESCRIPTION	No.	DESCRIPTION
557	DDEC III-VEHICLE SPEED (-)						
563	DDEC III-FAN CLUTCH SPEED# 2						
564	DDEC III-DIGITAL OUTPUT						
565	DDEC III-ENGINE BRAKE ACTIVE						
583	DDEC III-ENGINE BRAKE 4 CYL.						
900	DDEC III-DATA LINK (+)						
901	DDEC III-DATA LINK (-)						
908	DDEC III-HYDRAULIC PWM#1 OUTPUT						
916	DDEC III-SENSOR SUPPLY (5VDC)						
952	DDEC III-SENSOR RETURN						
953	DDEC III-BATTERY GRD						
979	DDEC III-ENGINE BRAKE 2 CYL.						

CIRCUIT BREAKERS CODE

No.	PAGE	AMP.	#PREV.	LOCATION	FUNCTION
CB 1	2	40A	560703	BAT. CPT.	12V IGNITION
CB 2	1.1	30A	870690	BAT. CPT.	12V HOT WIRE
CB 3	1.1	40A	560703	BAT. CPT.	12V FEED RR. JCT. BOX
CB 4	1.1	40A	560703	BAT. CPT.	12V FEED FR. JCT. BOX
CB 5	1.1	30A	870690	BAT. CPT.	24V HOT WIRE
CB 6	1.1	90A	560298	BAT. CPT.	24V FEED RR. JCT. BOX
CB 7	1.1	90A	560298	BAT. CPT.	24V FEED FR. JCT. BOX
CB 8	1.1	150A	560299	BAT. CPT.	24V EVAPORATOR FAN MOTOR
CB 10	4	8A	561791	FR. JCT. BOX	MASTER KEY SWITCH
CB 16	4	8A	561791	RR. JCT. BOX	ENGINE-RR. CTRL & START SW.
CB 18	4	6A	561790	RR. JCT. BOX L→R→	ENGINE-FR. CTRL SW.
CB 19	5	15A	561793	BAT. CPT.	E.C.M. DDEC III 12V POWER
CB 20	5	15A	561793	BAT. CPT.	E.C.M. DDEC III 12V POWER
CB 21	5	6A	561790	BAT. CPT.	E.C.M. DDEC III 12V IGNITION
CB 24	6	20A	561794	BAT. CPT.	WORLD TRANSMISSION 12V POWER
CB 26	9.3	10A	561792	RR. JCT. BOX	BACK-UP LTS
CB 27	7	8A	561791	FR. JCT. BOX	24V IGNITION DASH ACCESSORIES
CB 28	7	6A	561790	FR. JCT. BOX	12V IGNITION DASH ACCESSORIES
CB 34	9.3	10A	561792	RR. JCT. BOX	BACK-UP ALARM
CB 35	9.3	6A	561790	FR. JCT. BOX	FOG & HAZARD DASH SW.
CB 37	9.1	6A	561790	FR. JCT. BOX	HEAD & MULTI-FUNCTION LEVEL SW.
CB 38	9.1	10A	561792	FR. JCT. BOX	FR. MARKER LTS
CB 39	9.1	20A	561794	FR. JCT. BOX	CLEARANCE & IDENTIFICATION LTS
CB 40	9.1	8A	561791	FR. JCT. BOX	FR. CLEARANCE & IDENTIFICATION LTS
CB 41	9.1	8A	561791	RR. JCT. BOX	RR. CLEARANCE & IDENTIFICATION LTS
CB 42	9.1	8A	561791	RR. JCT. BOX	RR. TAIL & LICENCE LTS
CB 43	9.1	20A	561794	FR. JCT. BOX	HEADLAMP (HI)
CB 44	9.1	15A	561793	FR. JCT. BOX	HEADLAMP (LO)
CB 45	9.2	10A	561792	FR. JCT. BOX	WIPER CTRL MULTI-FUNCTION LEVEL SW.
CB 46	9.2	20A	561794	FR. JCT. BOX	FLASHER & HAZARD UNIT
CB 48	9.3	6A	561790	FR. JCT. BOX	STOP LTS PRESSURE SW.
CB 49	9.3	15A	561793	RR. JCT. BOX	STOP & CYCLOP LTS
CB 51	10	10A	561792	FR. JCT. BOX	UPPER WIPER CTRL SW.
CB 52	11.1	15A	561793	RR. JCT. BOX	LUGGAGE & DOOR AJAR LTS
CB 57	11.2	8A	561791	FR. JCT. BOX	DASH LTS RHEOSTAT
CB 63	11.4	8A	561791	FR. SERVICE.CPT	110V FLUORESCENT LH
CB 64	11.4	8A	561791	FR. SERVICE.CPT	110V FLUORESCENT RH
CB 70	13.1	6A	561790	FR. JCT. BOX	A/C & HEAT SW.
CB 71	13.1	10A	561792	RR. JCT. BOX	A/C & HEAT LOGIC PANEL
CB 72	13.1	10A	561792	RR. JCT. BOX	A/C COMPRESSOR CLUTCH
CB 73	13.1	15A	561793	RR. JCT. BOX	WATER PUMP
CB 77	13.2	40A	560703	BAT. CPT.	CONDENSER FAN MOTOR RH
CB 78	13.2	40A	560703	BAT. CPT.	CONDENSER FAN MOTOR LH
CB 79	13.2	15A	561793	FR. JCT. BOX	DRIVER'S HTR FAN SPEED CTRL MODULE
CB 85	16	6A	561790	FR. JCT. BOX	ENTRANCE DOOR (SEDAN) & STEP LTS
CB 93	1.2	30A	870690	BAT. CPT.	SOUND SYSTEM 12V FEEDING
CB 94	1.2	30A	870690	BAT. CPT.	SOUND SYSTEM 12V FEEDING
CB 95	20.1	10A	561792	S.S. JCT. PANEL	SOUND SYSTEM AMPLI
CB 96	20.1	10A	561792	S.S. JCT. PANEL	VIDEO SYSTEM
CB 97	20.1	10A	561792	S.S. JCT. PANEL	SOUND SYSTEM B/U P.A. AMPLI
CB 98	20.1	15A	561793	S.S. JCT. PANEL	SOUND SYSTEM RADIO & CD
CB 99	20.7	15A	561793	S.S. JCT. PANEL	SEAT AUDIO SYSTEM
CB 105	21	6A	561790	FR. JCT. BOX	E.C.U. ABS
CB 106	21	10A	561792	FR. JCT. BOX	E.C.U. ABS
CB 107	21	10A	561792	FR. JCT. BOX	E.C.U. ABS
CB 124	8	6A	561790	RR. JCT. BOX	RADIATOR FAN CLUTCH
CB 126	25.1	150A	560299	BAT. CPT.	WHELL CHAIR LIFT MOTOR PUMP STE.
CB 126	25.2	90A	560298	BAT. CPT.	WHELL CHAIR LIFT MOTOR PUMP RICON

CIRCUIT BREAKERS CODE

No.	PAGE	AMP.	#PREV.	LOCATION	FUNCTION
CB 1	2	40A	560703	BAT. CPT.	12V IGNITION
CB 2	1.1	30A	870690	BAT. CPT.	12V HOT WIRE
CB 3	1.1	40A	560703	BAT. CPT.	12V FEED RR. JCT. BOX
CB 4	1.1	40A	560703	BAT. CPT.	12V FEED FR. JCT. BOX
CB 5	1.1	30A	870690	BAT. CPT.	24V HOT WIRE
CB 6	1.1	90A	560298	BAT. CPT.	24V FEED RR. JCT. BOX
CB 7	1.1	90A	560298	BAT. CPT.	24V FEED FR. JCT. BOX
CB 8	1.1	150A	560299	BAT. CPT.	24V EVAPORATOR FAN MOTOR
CB 10	4	8A	561791	FR. JCT. BOX	MASTER KEY SWITCH
CB 16	4	8A	561791	RR. JCT. BOX	ENGINE-RR. CTRL & START SW.
CB 18	4	6A	561790	RR. JCT. BOX	ENGINE-FR. CTRL SW.
CB 19	5	15A	561793	BAT. CPT.	E.C.M. DDEC III 12V POWER
CB 20	5	15A	561793	BAT. CPT.	E.C.M. DDEC III 12V POWER
CB 21	5	6A	561790	BAT. CPT.	E.C.M. DDEC III 12V IGNITION
CB 24	6	20A	561794	BAT. CPT.	WORLD TRANSMISSION 12V POWER
CB 26	9.3	10A	561792	RR. JCT. BOX	BACK-UP LTS
CB 27	7	8A	561791	FR. JCT. BOX	24V IGNITION DASH ACCESSORIES
CB 28	7	6A	561790	FR. JCT. BOX	12V IGNITION DASH ACCESSORIES
CB 34	9.3	6A	561792	RR. JCT. BOX	BACK-UP ALARM
CB 35	9.3	6A	561790	FR. JCT. BOX	FOG & HAZARD DASH SW.
CB 37	9.1	6A	561790	FR. JCT. BOX	HEAD & MULTI-FUNCTION LEVEL SW.
CB 38	9.1	10A	561792	FR. JCT. BOX	FR. MARKER LTS
CB 39	9.1	20A	561794	FR. JCT. BOX	CLEARANCE & IDENTIFICATION LTS
CB 40	9.1	8A	561791	FR. JCT. BOX	FR. CLEARANCE & IDENTIFICATION LTS
CB 41	9.1	8A	561791	RR. JCT. BOX	RR. CLEARANCE & IDENTIFICATION LTS
CB 42	9.1	8A	561791	RR. JCT. BOX	RR. TAIL & LICENCE LTS
CB 43	9.1	20A	561794	FR. JCT. BOX	HEADLAMP (HI)
CB 44	9.1	15A	561793	FR. JCT. BOX	HEADLAMP (LO)
CB 45	9.2	10A	561792	FR. JCT. BOX	WIPER CTRL MULTI-FUNCTION LEVEL SW.
CB 46	9.2	20A	561794	FR. JCT. BOX	FLASHER & HAZARD UNIT
CB 48	9.3	6A	561790	FR. JCT. BOX	STOP LTS PRESSURE SW.
CB 49	9.3	15A	561793	RR. JCT. BOX	STOP & CYCLOP LTS
CB 51	10	10A	561792	FR. JCT. BOX	UPPER WIPER CTRL SW.
CB 52	11.1	15A	561793	RR. JCT. BOX	LUGGAGE & DOOR AJAR LTS
CB 57	11.2	8A	561791	FR. JCT. BOX	DASH LTS RHEOSTAT
CB 63	11.4	8A	561791	FR. SERVICE.CPT	110V FLUORESCENT LH
CB 64	11.4	8A	561791	FR. SERVICE.CPT	110V FLUORESCENT RH
CB 70	13.1	6A	561790	FR. JCT. BOX	A/C & HEAT SW.
CB 71	13.1	10A	561792	RR. JCT. BOX	A/C & HEAT LOGIC PANEL
CB 72	13.1	10A	561792	RR. JCT. BOX	A/C COMPRESSOR CLUTCH
CB 73	13.1	15A	561793	RR. JCT. BOX	WATER PUMP
CB 77	13.2	40A	560703	BAT. CPT.	CONDENSER FAN MOTOR RH
CB 78	13.2	40A	560703	BAT. CPT.	CONDENSER FAN MOTOR LH
CB 79	13.2	15A	561793	FR. JCT. BOX	DRIVER'S HTR FAN SPEED CTRL MODULE
CB 85	16	10A	561790	FR. JCT. BOX	ENTRANCE DOOR (SEDAN) & STEP LTS
CB 93	1.2	30A	870690	BAT. CPT.	SOUND SYSTEM 12V FEEDING
CB 94	1.2	30A	870690	BAT. CPT.	SOUND SYSTEM 12V FEEDING
CB 95	20.1	10A	561792	S.S. JCT. PANEL	SOUND SYSTEM AMPLI
CB 96	20.1	10A	561792	S.S. JCT. PANEL	VIDEO SYSTEM
CB 97	20.1	10A	561792	S.S. JCT. PANEL	SOUND SYSTEM B/U P.A. AMPLI
CB 98	20.1	15A	561793	S.S. JCT. PANEL	SOUND SYSTEM RADIO & CD
CB 99	20.7	15A	561793	S.S. JCT. PANEL	SEAT AUDIO SYSTEM
CB 105	21	6A	561790	FR. JCT. BOX	E.C.U. ABS
CB 106	21	10A	561792	FR. JCT. BOX	E.C.U. ABS
CB 107	21	10A	561792	FR. JCT. BOX	E.C.U. ABS
CB 124	8	6A	561790	RR. JCT. BOX	RADIATOR FAN CLUTCH
CB 126	25.1	150A	560299	BAT. CPT.	WHELL CHAIR LIFT MOTOR PUMP STE.
CB 126	25.2	90A	560298	BAT. CPT.	WHELL CHAIR LIFT MOTOR PUMP RICON

CIRCUIT BREAKERS CODE

No.	PAGE	AMP.	#PREV.	LOCATION	FUNCTION

CONNECTORS CODE

NO	LOCATION	TYPE	CAVITY	#PIN HOUSING	#SOCKET HOUSING
CA	RR JCT BOX-ECU WORLD TR.	T & BET	34	------	562419
CB	RR JCT BOX-ECU WORLD TR.	T & BET	34	------	562420
C1	FR JCT BOX COMPARTMENT	AMP CPC	14	561585	561584
C2	FR JCT BOX COMPARTMENT	AMP CPC	16	561639	561640
C3	FR JCT BOX COMPARTMENT	AMP CPC	24	561641	561643
C4	FR JCT BOX COMPARTMENT	AMP CPC	37	561644	561646
C5	FR SERVICE COMPT.-UNDERNEATH	AMP CPC	37	561644	561646
C6	FR SERVICE COMPT.-UNDERNEATH	AMP CPC	16	561639	561640
C8	FR SERVICE COMPT.-UNDERNEATH	AMP CPC	24	561641	561643
C9	FR SERVICE COMPT.-UNDERNEATH	AMP CPC	24	561641	561643
C11	FR SERVICE COMPARTMENT	AMP CPC	37	561644	561646
C12	FR SERVICE COMPARTMENT	AMP CPC	16	561639	561640
C12	LH CONSOLE-HEATER MIR.	AMP MNL	2	561248	561247
C13	LH CONSOLE-CTR MIRROR	AMP MNL	6	561552	561515
C14	UNDER DASH-LH MIRROR	AMP MNL	9	561661	561662
C15	RR JCT BOX	AMP CPC	24	561641	561643
C15	UNDER DASH-RH MIRROR	AMP MNL	9	561661	561662
C16	LH CONSOLE SW-CRUISE ON OFF	SWF	8	------	561107
C17	LH CONSOLE SW-CRUISE RESUME	SWF	8	------	561107
C18	LH CONSOLE SW-CRUISE SET	SWF	8	------	561107
C20	RR JCT BOX	AMP CPC	37	561644	561646
C21	RR JCT BOX	AMP CPC	24	561641	561643
C26	HYD & MAN TRANSM.-NEUT.& B/U	PED WP	4	561610	561611
C27	HYD & MAN TRANSM.-SPEED SENS.	PED WP	2	561566	561690
C32	DDEC ENGINE-ECM	PED	30	------	561600
C35	RR JCT BOX	AMP CPC	24	561642	561643
C36	EMERGENCY EXIT LTS	AMP MNL	2	560900	560898
C37	RR SECTION-LH HAT RACK	AMP MNL	9	561661	561662
C38	RR SECTION-RH HAT RACK	AMP MNL	9	561661	561662
C41	LAVATORY ROOF FLUORESCENT	AMP MNL	2	560900	560898
C42	LAVATORY BACK WALL-WTR TANK	AMP MNL	2	560900	560898
C43	LAVATORY BACK WALL-ACCES.	AMP MNL	9	561661	561662
C45	ALARM JCT BOX COMPARTMENT	AMP CPC	24	561642	561643
C47	FR SERVICE COMPARTMENT	AMP CPC	16	561694	561695
C49	BATTERIE COMPT.-LT	AMP MNL	2	561248	561247
C50	FR SERVICE COMPT.-LOW BUOY	PED WP	1	561605	561577
C52	RR JCT BOX	AMP CPC	22	561709	561710
C55	RH SWITCH PANEL	AMP CPC	9	561636	561637
C60	RR JCT BOX COMPT.-LT	AMP MNL	2	561248	561247
C61	LUGGAGE COMPARTMENT LTS	AMP MNL	2	561248	561247
C62	LUGGAGE COMPARTMENT LTS	AMP MNL	2	561248	561247
C63	LUGGAGE COMPARTMENT LTS	AMP MNL	2	561248	561247
C64	LUGGAGE COMPARTMENT LTS	AMP MNL	2	561248	561247
C65	LUGGAGE COMPARTMENT LTS	AMP MNL	2	561248	561247
C66	LUGGAGE COMPARTMENT LTS	AMP MNL	2	561248	561247
C67	LUGGAGE COMPARTMENT LTS	AMP MNL	2	561248	561247
C68	LUGGAGE COMPARTMENT LTS	AMP MNL	2	561248	561247
C69	RR AXLE ACC-INSIDE PVC END	PED WP	6	561568	561578
C70	LH CONSOLE	AMP CPC	24	561642	561643
C71	FR JCT BOX COMPARTMENT	AMP CPC	37	561645	561646
C72	FR JCT BOX COMPARTMENT	AMP CPC	24	561642	561643
C73	DASH CENTER PANEL	AMP CPC	16	561639	561640
C74	FR JCT BOX COMPARTMENT	AMP CPC	37	561645	561646
C76	LUGGAGE COMPT.-AIR RET.SENS.	AMP MNL	2	561248	561247
C77	LUGGAGE COMPT.-AIR RET.SENS.	AMP MNL	2	561248	561247
C80	LUGGAGE COMPT.-AIR RET.SENS.	AMP MNL	2	561248	561247
C81	PASSENGER COMPT.-AISLE LTS	AMP MNL	2	560900	560898
C82	ENTRANCE DOOR	MOLEX	6	562070	562069
C83	ENTRANCE DOOR-PROIMITY SW	MOLEX	4	561477	561476
C84	ENTRANCE DOOR-PRESSURE SW	PED WP	2	561566	561690
C85	UNDER INSTRUMENT PANEL LH	AMP MTA-100 8	------	562248	------
C87	RR END ROOF	AMP CPC	9	561636	561637
C88	RR END ROOF-CLEARANCE LTS	AMP MNL	2	560900	560898
C89	RR END ROOF-B/U NONITOR	AMP CPC	4	561582	561581
C90	RR JCT BOX	AMP CPC	15	561987	561986

NO	LOCATION	TYPE	CAVITY	#PIN HOUSING	#SOCKET HOUSING
C91	RR JCT BOX	AMP CPC	37	561714	561713
C92	FR LH UPPER WHELL CPT-ABS	AMP CPC	9	561635	561637
C93	FR LH UPPER WHELL CPT-ABS	WABCO	35	------	641094
C96	FR AXLE ACCESSORIES	AMP CPC	14	561585	561585
C97	RR AXLE ACC-INSIDE PVC END	PED WP	6	561568	561578
C98	FR SERVICE COMPT-EL.FT.PEDAL	PED WP	3	561782	561781
C99	FR SERVICE COMPT LTS	AMP MNL	2	561248	561247
C101	FR SERVICE COMPT-ELEC. HORNS	PED WP	2	561566	561690
C102	FR SERV & SIDE CPT-FLASH. LH	ITT SS	2	561813	561812
C103	FR SERV & SIDE CPT-MARKERS	ITT SS	2	561813	561812
C104	FR SERV & SIDE CPT-FLASH. RH	ITT SS	2	561813	561812
C105	FR SERVICE COMPT-LIQ.S.VALVE	PED WP	2	561566	561690
C106	FR SERVICE COMPT-WATER VALVE	PED WP	2	561566	561690
C107	EVAPORATOR COMPT-DAMPER	PED WP	2	561566	561690
C108	FR SERVICE COMPT-KNEEL.SYS	PED WP	2	561566	561690
C109	FR SERVICE COMPT-KNEEL.SYS	PED WP	2	561566	561690
C110	FR SERVICE COMPT-KNEEL.SYS	PED WP	2	561566	561690
C111	EVAPORATOR COMPT-DAMPER	ITT SS	2	561813	561812
C112	EVAPORATOR COMPT-SPEED MOT CTRL	DEUTCH	5	------	562566
C113	BATT. & RR J.B.CPT.MARKER LT	ITT SS	2	561813	561812
C114	RR J. BOX CPT DOOR DIR LT LH	GROTE	2	------	562155
C115	ENGINE COMPT-AIR DRYER	PED WP	2	561566	561690
C116	ENGINE COMPT. LTS	PED WP	2	561566	561690
C118	ENGINE COMPT-LAVATORY FAN	TC	2	561030	560997
C119	ENGINE CPT RR DOOR RH LO LAMP	PED WP	6	561606	561607
C120	ENGINE CPT RR DOOR LH LO LAMP	PED WP	6	561606	561607
C121	BATTERIE CPT. DOOR DIR LT RH	GROTE	2	------	562155
C122	ENGINE CPT-UNLOAD TAG SYSTEM	PED WP	2	561566	561690
C123	TAG AXLE-UNLOAD TAG RH VALVE	PED WP	2	561566	561690
C124	ENGINE CPT-ETHER SW	PED WP	2	561566	561690
C125	ENGINE CPT-B/U ALARM	PED WP	2	561566	561690
C126	ENGINE CPT-FLUSHING PUMP	PED WP	2	561566	561690
C127	ENGINE CPT-FUEL FILTER	PED WP	2	561566	561690
C128	ENGINE CPT-A/C COMPR.CLUTCH	ITT SS	2	561813	561812
C129	ENGINE CPT-PRE-HEAT WATER	AMP FF	6	561672	561186
C130	ENGINE CPT-UNLOADER	ITT SS	2	561813	561812
C131	ENGINE CPT-UNLOADER	ITT SS	2	561813	561812
C132	ENGINE CPT-A/C LO PRESS SW	PED WP	2	561566	561690
C133	ENGINE CPT-A/C HI PRESS SW	PED WP	2	561566	561690
C134	FR JCT BOX-LUGGAGE DIODE CON.	AMP MNL	15	561987	561986
C135	FR JCT BOX-LUGGAGE DIODE CON.	AMP MNL	15	561987	561986
C137	RR JCT BOX-TRANSMITTER	AMP MNL	2	560900	560898
C138	RR JCT BOX-CONTROL MODULE	AMP HDP	15	------	562012
C139	RR JCT BOX-LOGIC MODULE	AMP HDP	15	562011	------
C142	LAVATORY DOOR WALL	AMP MNL	2	561248	561247
C143	LAVATORY DOOR WALL	AMP MNL	3	560908	562006
C144	UNDER LH SEAT-AISLE LTS	AMP MNL	4	560851	560852
C145	RR JCT BOX CPT-RR SIDE LTS	AMP MNL	9	561670	561669
C146	ENGINE CPT-MODULATOR VALVE	AMPHENOL	2	------	560412
C147	BATT & RR J.B.CPT-DOCK.LTS	PED WP	2	561566	561690
C149	CONDENSER CPT-FAN MOTOR	ORDNANCE	3	562555	562001
C151	EVAPORATOR CPT-THERMOSTAT	DEUTSCH	2	562486	562485
C152	CONDENSER CPT-FUEL GAUGE	PED WP	4	561610	561611
C153	EVAPORATOR CPT-AIR AMB. SENS	AMP MNL	2	561248	561247
C154	EVAPORATOR CPT-FRESH AIR SENS	ITT SS	2	561813	561812
C155	EVAPORATOR CPT-WATER VALVE	PED WP	4	561610	561611
C156	EVAPOR. CPT-BYPASS WATER VAL.	PED WP	2	561566	561690
C157	EVAPORATOR CPT-WATER PUMP	PED WP	2	561566	561690
C158	CONDENSER CPT-A/C LO TEMP.	PED WP	2	561566	561690
C159	CONDENSER CPT-A/C HI TEMP.	PED WP	2	561566	561690
C160	FR AXLE-ABS RH SENSOR	WABCO	2	641132	------
C161	FR AXLE-ABS RH VALVE	WABCO	3	------	641098
C162	FR AXLE-ABS LH VALVE	WABCO	3	------	641098
C163	FR AXLE-ABS LH SENSOR	WABCO	2	641132	------
C164	RR AXLE-ABS LH SENSOR	DEUTSCH	2	562486	562485

CONNECTORS CODE

NO	LOCATION	TYPE	CAVITY	#PIN HOUSING	#SOCKET HOUSING
C 165	RR AXLE-ABS LH VALVE	WABCO	3	------	641098
C 166	RR AXLE-ABS RH VALVE	WABCO	3	------	641098
C 167	RR AXLE-ABS RH SENSOR	DEUTSCH	2	562486	562485
C 168	RR AXLE-ABS OPT ATC	PED WP	4	561610	561611
C 169	RR JCT BOX-SPEED SW	AMP HDP	15	------	562012
C 170	FR JCT BOX-FLASHER UNIT	TC	2	------	561940
C 171	LH CONSOLE	AMP CPC	37	561645	561646
C 172	ENGINE COMPT-WATER TANK HEAT.	PED WP	2	561566	561690
C 173	LAV.POTABLE-WATER TANK HEAT.	AMP MNL	2	560900	560898
C 174	UNDER DASH RH-HTR MODULE	AMP MNL	9	561670	561669
C 175	UNDER DASH RH-HTR MODULE	AMP MNL	9	561670	561669
C 176	UNDER DASH RH-WIPER PULSE	AMP FF	6	------	561186
C 177	UNDER DASH RH-WIPER MOTOR	AMP FF	6	------	561186
C 178	UNDER DASH RH-LH FAN	TC	2	561030	560997
C 179	UNDER DASH RH-RH FAN	TC	2	561030	560997
C 181	RR JCT BOX-DIODE CONNECTOR	AMP MNL	15	561987	561986
C 182	RR JCT BOX COMPT.-WT VIW	AMP CPC	16	561639	561640
C 183	FR SERVICE CPT-KNEELING PAN.	PED WP	4	561610	561611
C 184	FR SERVICE CPT-KNEELING SW	ITT SS	3	561111	561080
C 185	RR JCT BOX COMPT.-WT VIM	PED	30	------	561600
C 186	RR JCT BOX CPT.-SPEED SIGN.TR	PED WP	2	561566	561690
C 186M	RR JCT BOX CPT.-SPD SIGN. M.TR	PED WP	2	561566	561690
C 186W	RR JCT BOX CPT.-SPD SIGN. WT	PED WP	2	561566	561690
C 187	FR JCT BOX-RPM RESISTOR CON.	AMP MNL	6	561552	561515
C 189	ENGINE CPT RR DOOR B/U LT	PED WP	2	561566	561690
C 190	ENGINE CPT RR DOOR TAIL LT	PED WP	2	561566	561690
C 191	ENGINE CPT RR DOOR RH STOP LT	PED WP	2	561566	561690
C 192	ENGINE CPT RR DOOR RH DIR. LT	PED WP	2	561566	561690
C 193	FR SECT. LH HAT RACK-FLUOR.	AMP MNL	2	561248	561247
C 194	ENGINE CPT RR DOOR LH DIR. LT	PED WP	2	561566	561690
C 195	ENGINE CPT RR DOOR LH STOP LT	PED WP	2	561566	561690
C 196	ENGINE CPT RR DOOR CYCLOP LT	PED WP	2	561566	561690
C 199	ENGINE CPT RR DOOR LICENCE LT	DOM AUTO	2	930210	------
C 200	RH HAT RACK-FLUORESCENT	AMP MNL	4	561551	561668
C 201	RH HAT RACK-FLUORESCENT	AMP MNL	4	561551	561668
C 202	RH HAT RACK-BALLAST	AMP MNL	4	560851	560852
C 203	RH HAT RACK-BALLAST	AMP MNL	6	561552	561515
C 204	RH HAT RACK-GENERAL LT	AMP MNL	3	561667	561550
C 205	FR SECT.-RH HAT RACK SPEAKER	AMP MNL	9	561661	561662
C 206	RH HAT RACK-READING LT	AMP MNL	2	560900	560898
C 207	LH HAT RACK-READING LT	AMP MNL	2	560900	560898
C 208	LH HAT RACK-BALLAST	AMP MNL	4	560851	560852
C 210	FR SECT.-LH HAT RACK SPEAKER	AMP MNL	9	561661	561662
C 211	FR ROOF-STORE LH	AMP MNL	2	560900	560898
C 212	FR ROOF-STORE RH	AMP MNL	2	560900	560898
C 213	FR ROOF-CLEARANCE LT	AMP MNL	2	560900	560898
C 220	RR.JCT.BOX-FUEL PRIME PUMP	TC	1	561070	561073
C 225	FR SECT. RH HAT RACK-FLUOR.	AMP MNL	2	561248	561247
C 230	ENG.CPT.-FUEL PRIME PUMP FEED	DEUTSCH	2	562486	562485
C 231	ENG.CPT.-FUEL PRIME PUMP SW.	PED WP	2	561566	561690
C 232	ENG.CPT.-FUEL PRIME PUMP	PED WP	2	561566	561690
C 233	INSTRUMENT PANEL CENTER	V.D.O.	8	------	562043
C 234	INSTRUMENT PANEL CENTER	V.D.O.	4	------	562044
C 235	INSTRUMENT PANEL CENTER	V.D.O.	8	------	562041
C 236	INSTRUMENT PANEL CENTER	AMP MNL	4	560851	560852
C 237	UNDER DASH LH-JACOB CLUTCH SW	ITT SS	3	561111	561080
C 238	RR JCT BOX-DIODE CONNECTOR	AMP MNL	9	561670	561669
C 239	FR SERVICE CPT-HI BUOY VALVE	PED WP	2	561566	561690
C 240	FR SERVICE CPT-KNEEL PROX SW	PED WP	2	561566	561690
C 241	FR SERVICE CPT-FOG RESISTOR	AMP CPC	3	561847	561862
C 242	FR SERVICE CPT-MARK & DIR LT	ITT SS	3	561111	561080
C 243	FR SERVICE CPT-HEADLAMPS	TC	3	------	561071
C 244	FR SERVICE CPT-LH FOG LAMP	ITT SS	2	561813	561812
C 245	FR SERVICE CPT-RH FOG LAMP	ITT SS	2	561813	561812
C 246	FR SERVICE CPT-MARK & DIR LT	ITT SS	3	561111	561080

NO	LOCATION	TYPE	CAVITY	#PIN HOUSING	#SOCKET HOUSING
C 248	FR JCT BOX-WIPER PULSE GEN	AMP FF	6	------	561108
C 251	LH SW PANEL-FAST IDLE	SWF	8	------	561107
C 252	LH SW PANEL-SWITCH LT	SWF	2	------	561837
C 253	LH SW PANEL-ETHER	SWF	8	------	561107
C 254	INST. PANEL RH-ENTR.DOOR SW.	TORRIX	5	------	562110
C 255	LH SW PANEL-JACOB	SWF	8	------	561107
C 257	INSTRUMENT PANEL CENT-TACHO	AMP FF	8	------	562363
C 258	LH SW PANEL-MULTI FUNC. SW	AMP FF	8	561188	------
C 259	LH SW PANEL-MULTI FUNC. SW	AMP FF	6	------	561108
C 260	FR SERVICE CPT-LUG DOOR LCK	PED WP	6	561606	561607
C 261	UNDER DASH RH-DOOR MODULE	AMP MNL	9	561670	561669
C 262	UNDER DASH RH-DOOR MODULE	AMP MNL	4	561551	561668
C 263	UNDER DASH RH-DOOR MODULE	AMP MNL	3	561667	561550
C 264	UNDER DASH RH-DOOR MODULE	AMP MNL	3	561667	561550
C 265	UNDER DASH RH-DOOR MODULE	AMP HDP-20	15	562011	562012
C 267	UNDER DASH RH	AMP CPC	24	561642	561643
C 268	UNDER DASH LH-MIRROR	AMP MNL	6	561552	561515
C 269	UNDER DASH RH-MIRROR	AMP MNL	6	561552	561515
C 270	LH MIRROR POST	MOLEX	6	562070	562069
C 271	RH MIRROR POST	MOLEX	6	562070	562069
C 272	LH MIRROR	SPARTAN	6	------	990158
C 273	RH MIRROR	SPARTAN	6	------	990158
C 275	UNDER DASH RH-DOOR MODULE	AMP MNL	9	561670	561669
C 276	UNDER DASH RH-LOCK SOL.VALVE	AMP MNL	2	561248	561247
C 279	UNDER DASH CYLINDER READ SW.	AMP MNL	2	561248	561247
C 280	LH CONSOLE-UNLOAD TAG SW.	SWF	8	------	561107
C 286	RH SW PANEL-A/C & HEAT	SWF	8	------	561107
C 287	ENGINE COMPT-LTS SW	PED WP	2	561566	561690
C 288	RH SW PANEL-FRESH AIR	SWF	8	------	561107
C 289	RH SW PANEL-SWITCH LT	SWF	2	------	561837
C 297	INSTRUMENT PANEL RH -LTS	AMP MNL	2	560900	560898
C 299	LH CONSOLE SW-GALLEY	SWF	8	------	561107
C 301	INSTRUMENT PANEL CENT-TACHO	AMP MNL	4	560851	560852
C 308	LH CONSOLE SW-RHEOSTAT	TC	2	561030	560997
C 309	DDEC ENGINE-ECM POWER CON.	PED MP	5	------	562345
C 310	LH CONSOLE SW-LUG. DOOR LCK	SWF	8	------	561107
C 311	LH CONSOLE SW-HOS & PAS CHIME	SWF	8	------	561107
C 312	LH CONSOLE SW-READING LTS	SWF	8	------	561107
C 313	LH CONSOLE SW-GEN & FLUOR LTS	SWF	8	------	561107
C 314	LH CONSOLE SW-FR DEST. SIGN	SWF	8	------	561107
C 315	LH CONSOLE SW-LH STORE	SWF	8	------	561107
C 316	LH CONSOLE SPARE SWITCH	SWF	8	------	561107
C 317	LH CONSOLE SW-RH STORE	SWF	8	------	561107
C 318	LH CONSOLE SW-DRV WINDOW LIFT	SWF	8	------	561107
C 320	LH CONSOLE SW-DRIVER'S LTS	SWF	8	------	561107
C 322	LH CONSOLE DRV WIND LIFT MOT	PED PO	2	------	561848
C 323	LH CONSOLE CRUISE CTR SW PAN. AMP	CPC	9	561636	561637
C 325	LH CONSOLE SW-KNEELING	SWF	8	------	561107
C 326	LH CONSOLE SW-SPARE	SWF	8	------	561107
C 327	ENGINE CONTROL	DEUTSCH	6	562583	562581
C 328	GALLEY-LAMP	AMP MNL	2	561248	561247
C 329	ENGINE TACHO SIGNAL	PED WP	3	561781	561789
C 330	GALLEY MICROWAVE SW LT	SWF	2	------	561837
C 331	GALLEY MICROWAVE SW	SWF	8	------	561107
C 332	GALLEY RH CONTAINER SW LT	SWF	2	------	561837
C 333	GALLEY RH CONTAINER SW	SWF	8	------	561107
C 334	GALLEY LH CONTAINER SW	SWF	8	------	561107
C 335	GALLEY LH CONTAINER SW LT	SWF	2	------	561837
C 337	INSTR PANEL LH-UP WIPER SW	SWF	8	------	561107
C 338	INSTR PANEL LH-UP DEFROST SW	SWF	8	------	561107
C 339	INSTR PANEL LH-UP WASHER SW	SWF	8	------	561107
C 340	FR JCT. BOX FIRE PIEZO ALARM	AMP MNL	2	560900	560898
C 341	INSTR PANEL LH-HEAT MIRROR SW	SWF	8	------	561107
C 342	ENGINE RR START SW	DEUTSCH	2	562586	562585
C 343	INSTR PANEL LH-HEADLAMP SW	SWF	8	------	561107

CONNECTORS CODE

NO	LOCATION	TYPE	CAVITY	#PIN HOUSING	#SOCKET HOUSING
C 344	INSTR PANEL LH-HAZARD LT SW	SWF	8	------	561107
C 345	INSTR PANEL LH-FOG LT SW	SWF	8	------	561107
C 346	INSTR PANEL LH-SWITCH LTS	SWF	2	------	561837
C 347	INSTR PANEL LH-DASH LT SW	AMP MNL	2	560900	560898
C 348	INSTR PANEL CENT-RACOR MODULE	MOLEX	6	562070	562067
C 350	RH CONSOLE-THERMOMETER	AMP MNL	3	561667	561550
C 351	LH HAT RACK-FLUOR 110V	MOLEX	4	561477	561476
C 352	RH CONSOLE-DRV TEMP SENSOR	BURNDY	4	------	561104
C 353	INSTR PANEL RH-DRV FAN RHEOST	AMP MNL	6	561552	561515
C 354	INSTR PANEL RH-DRV TEMP CTR	AMP MNL	6	561552	561515
C 355	INSTR PANEL RH-FR TEMP CTR	AMP MNL	3	561667	561550
C 357	INSTR PANEL RH-WATER TEMP GA	AMP MNL	3	561667	561550
C 358	INSTR PANEL RH-FUEL LEVEL GA	AMP MNL	3	561667	561550
C 361	FR ROOF-WIPER MOTOR	AMP FF	6	------	561186
C 362	FR ROOF-LAVATORY OCCUPIED LT	AMP MNL	2	561248	561247
C 363	FR ROOF-WATCH YOUR STEP LT	AMP MNL	2	561248	561247
C 364	FR ROOF-DESTINATION SIGN	AMP MNL	3	561667	561550
C 365	FR ROOF-UP WINDSHIELD DEFROST	AMP MNL	3	561667	561550
C 366	RH DASH PANEL-GRN & RED LEDS	AMP MNL	3	560908	562006
C 367	ENGINE COMPT-DIF OIL T SENSOR	PED WP	2	561566	561690
C 368	FR ROOF-DEST. SIGN BALLAST	AMP MNL	3	561667	561550
C 369	FR ROOF-DEST. SIGN OPER. SW	TORRIX	5	------	562110
C 370	FR ROOF-DEST. SIGN FLUOR.	AMP MNL	2	560900	560898
C 371	FR ROOF-DEST. SIGN FLUOR.	AMP MNL	2	560900	560898
C 372	FR ROOF-DEST. SIGN SPEED SW	MOLEX	4	561477	561476
C 373	FR ROOF-NO SMOKING LT	AMP MNL	2	561248	561247
C 374	LH SWITCH PANEL	AMP MNL	6	561552	561515
C 376	LH SWITCH PANEL	AMP CPC	37	561714	562005
C 377	LH SW PANEL-STOP ENG.OVERIDE	SWF	8	------	561107
C 380	LH CONSOLE-DDR CONNECTOR	DEUTSCH	6	562360	------
C 386	LH CONSOLE-WCL POWER SYSTEM	SWF	8	------	561107
C 387	RR JCT BOX (WCL)	AMP MNL	9	561661	561662
C 388	RR JCT BOX (WCL)	AMP MNL	12	561735	561734
C 389	WCL REAR DOOR	MOLEX	4	561477	561476
C 390	LAVATORY WALL-WCL REMOTE CTR	SWF	8	------	561107
C 391	LAVATORY WALL-WCL LAMP	SWF	8	------	561107
C 392	LAVATORY WALL-WCL SW. LT.	SWF	2	------	561835
C 393	LAVATORY WALL-WCL REMOTE SYS.	AMP CPC	4	561686	561687
C 394	UNDER INSTR. PANEL- B/U MONITOR	AMP MNL	4	560851	560852
C 395	DRIVER'S COMPT. - B/U MONITOR	AMP	5	------	------
C 396	FR SECT. LH HAT RACK-SPEAKER	MOLEX	4	562507	562503
C 397	ENGINE COMPT. CRADLE ACC.	DEUTSCH	40	562281	562284
C 400	ENGINE COMPT. BLOCK HEATER	PED MP	3	561781	561782
C 402	RR DRIVE AXLE-AIR DRYER	PED MP	2	------	562251
C 403	GALLEY FRIGO NORCOLD	AMP MNL	2	561248	561247
C 404	GALLEY LAMP	AMP MNL	2	561248	561247
C 406	FR JCT BOX COMPT.-ABS	AMP MNL	2	560900	560898
C 407	ENGINE COMPT. -SIGNAL	PED WP	6	561606	561607
C 408	ENGINE COMPT. -SIGNAL	PED WP	6	561606	561607
C 409	ENGINE CPT -LOW COOL. LEVEL	PED MP	2	------	562350
C 410	FR JCT BOX-DIODE CONNECTOR	AMP MNL	15	561987	561986
C 411	FR JCT BOX-DIODE CONNECTOR	AMP MNL	15	561987	561986
C 412	LH SW PANEL-MASTER SWITCH	SWF	8	------	561107
C 413	ENG CPT-A/C HI UNLOAD PRS SW	PED WP	2	561566	561690
C 414	RR JCT BOX	AMP MNL	9	561670	561669
C 415	ENGINE CRADLE-FAN SIGNAL	PED WP	3	561781	561782
C 416	ENGINE CRADLE-FAN SIGNAL	PED P-C	3	562237	------
C 417	FRONT JCT BOX-DIODES	AMP MNL	15	561987	561986
C 418	INSTR. PANEL LH-HTR WINDSH.SW	SWF	8	------	561107
C 419	FR JCT BOX-RETARDER OR JACOB	AMP MNL	3	561667	561550
C 420	ENGINE COMPT. WEBASTO WATER HTR	TC	2	561597	------
C 421	ENGINE COMPT. WEBASTO WATER HTR	TC	1	561073	------
C 422	ENGINE COMPT. WEBASTO WATER HTR	TC	2	561597	------
C 424	UNDER INSTRUMENT PANEL CENTER	AMP MNL	3	561667	561550
C 425	FR JCT BOX-DIODES	AMP MNL	15	561987	561986

NO	LOCATION	TYPE	CAVITY	#PIN HOUSING	#SOCKET HOUSING
C 426	ENGINE COMPT. CLUTCH CTR FAN	PED WP	3	561781	561782
C 429	ALARM JCT BOX COMPT.	AMP MNL	6	561552	561515
C 430	LH CONSOLE-TIMER	AMP FF	8	561188	562363
C 431	LH CONSOLE-PRE HEAT.	TAB AMP	1	561540	561539
C 432	ENGINE CPT.-PROX. SW. DOOR AJAR	DEUTSCH	4	562479	562477
C 433	FR SERVICE CPT. KNEEL. PRESS. SW	PED WP	2	561566	561690
C 434	FRONT JCT. BOX-DIODES	AMP MNL	15	561987	561986
C 435	FR SERVICE CPT.(RH) KNEEL. PIEZO	AMP MNL	2	560900	560898
C 436	RH HAT RACK-WCL CENTER ROOF ACC	AMP CPC	16	561639	561640
C 437	RH HAT RACK-WCL FR & RR SECT.	AMP CPC	24	561642	561643
C 450	SOUND SYS. JCT. PANEL	MOLEX	4	562507	562503
C 451	WIRELESS MICRO-FIRST CPT BAG	MOLEX	2	562550	562549
C 452	UNDER DASH INSTR. PANEL	MOLEX	2	562550	562549
C 453	SOUND SYS. JCT.PANEL-VCP	PED WP	2	561566	561590
C 454	SOUND SYS.JCT.PAN.-FILT. VCP	PED WP	2	561566	561590
C 455	WIRELESS MICRO-LH HAT-RACK	CINCH	2	562554	562551
C 456	WORLD TRANSM.-RETARDER ACCUM.	PED MP	2	------	562427
C 457	WORLD TRANSM.-MAIN CONNECTOR	DEUTSCH	31	562572	562536
C 458	WORLD TRANSM.-TURBINE SP.SENS	PED MP	2	------	562426
C 459	WORLD TRANSM.-ENGINE SP.SENS.	PED MP	2	------	562426
C 460	WORLD TRANSM.-SPEED SENSOR	ITT	2	------	562541
C 461	WORLD TRANSM.-RETARDER TEMP.	PED MP	2	561566	561590
C 462	WORLD TRANSM.-RETARD SOL."K"	PED MP	2	------	562426
C 463	WORLD TRANSM.-SENSOR CONN.	DEUTSCH	16	562570	562571
C 464	RR JCT BOX-DDL CONN W.T.	PED MP	12	------	562574
C 465	LH CONSOLE-SHIFTER SELECTOR	T & BET	10	------	562429
C 466	FR SERVICE CPT.-RESIS. MOD.	PED WP	3	------	562428
C 467	FR SERVICE CPT.-RESIS. MOD.	PED WP	3	------	562428
C 468	RR JCT BOX-VIM MOD. W.T.	PED MP	18	------	562573
C 470	FR LH UPPER WHELL CPT-SILENT 1000	AMP MNL	2	561248	561247
C 471	FR LH UPPER WHELL CPT-SILENT 1000	AMP MNL	2	561248	561247
C 472	FR LH UPPER WHELL CPT-SILENT 1000	PED WP	2	561566	561690
C 473	FR LH UPPER WHELL CPT-SILENT 1000	AMP MNL	3	561667	561550
C 474	LUGGAGE CPT.-TEMP. SENSOR	AMP MNL	2	561247	561248
C 475	RR JCT BOX-SPEED SIGN CONNECTOR	AMP MNL	2	561248	561247
C 475M	RR JCT BOX-SPEED SIGN MANUAL TR.	MOLEX	6	562070	562069
C 475W	RR JCT BOX-SPEED SIGN WORLD TR.	MOLEX	6	562070	562069
C 476	RR JCT BOX-VIM WORLD TRANSM.	AMP CPC	16	561639	561640
C 477	RR JCT BOX-WORLD TR. SHIFT.&RET.	AMP CPC	9	561636	561637
C 478	ELECTRONIC DESTINATION SIGN	AMP CPC	9	561636	561637
C 483	FR SERVICE CPT. (NOT USED)	PED PC	2	------	562237
C 500	FR LH UPPER WHELL CPT -PRODRIVER	MOLEX	6	562070	562069
C 501	FR LH UPPER WHELL CPT -PRODRIVER MOD	PED MP	7	562433	------
C 502	LH CONSOLE-PRE HEATER SW.	SWF	8	------	561107
C 503	LH CONSOLE-PRE HEATER SW.	SWF	2	------	561837
C 504	LH CONSOLE WEBASTO TIMER	AMP	8	561188	562363
C 505	LH CONSOLE ESPAR TIMER	AMP	3	------	562034
C 506	FR JCT BOX CPT. DIGITAL CLOCK	AMP	4	561685	561687
C 507	FR SECT. LH HAT-RACK DIG. CLOCK	MOLEX	4	561477	561476
C 508	RR JCT BOX-FAN CLUTCH RETARDER	AMP MNL	6	561552	561515
C 509	FR LH UPPER WHELL CPT -DATA LOGGER	PED MP	16	------	562530
C 510	FR LH UPPER WHELL CPT -DATA LOGGER	DEUTSCH	9	562531	------
C 511	FR LH UPPER WHELL CPT -DATA LOGGER	PED MP	4	562532	------
C 512	FR LH UPPER WHELL CPT -DATA LOGGER	PED MP	10	562533	------
C 513	FR LH UPPER WHELL CPT -DATA LOGGER	AMP MNL	3	561667	561550
C 514	FR LH UPPER WHELL CPT -DATA LOGGER	PED MP	6	562433	562417
C 515	RH DASH PANEL-T.T.LT.	AMP CPC	14	561585	561583
C 515	FR JCT BOX CPT.-INTERCOM	MOLEX	4	561477	561476
C 516	CENTER DASH PANEL -UPPER T.T.LT.	AMP CPC	24	561642	561643
C 516	FR JCT BOX CPT.-INTERCOM	MOLEX	6	562070	562069
C 517	CENTER DASH PANEL -LOWER T.T.LT.	AMP CPC	24	561642	561643
C 517	LAVATORY WALL-INTERCOM	MOLEX	6	562070	562069
C 519	UNDER DASH RH-SEDAN DOOR	HUMPHREY	2	------	562580
C 520	UNDER DASH RH-SEDAN DOOR	HUMPHREY	2	------	641385
C 521	UNDER DASH RH-SEDAN DOOR	HUMPHREY	2	------	641385

CONNECTORS CODE

NO	LOCATION	TYPE	CAVITY	#PIN HOUSING	#SOCKET HOUSING
C 522	FR JCT BOX-DAYTIME LTS MODULE	BOSCH	5	------	561183
C 523	FR JCT BOX-FUSE BLOCK	PED	8	562647	562646
C 524	FR JCT BOX-FUSE BLOCK	PED	8	562647	562646
C 525	FR JCT BOX-FUSE BLOCK	PED	8	562647	562646
C 526	FR JCT BOX-FUSE BLOCK	PED	8	562647	562646
C 527	FR JCT BOX-FUSE BLOCK	PED	8	562647	562646
C 528	FR JCT BOX-FUSE BLOCK	PED	8	562647	562646
C 529	FR JCT BOX-12V OUTLET	AMP MNL	2	561247	561248
C 530	RR JCT BOX-FUSE BLOCK	PED	8	562647	562646
C 531	RR JCT BOX-FUSE BLOCK	PED	8	562647	562646
C 532	RR JCT BOX-FUSE BLOCK	PED	8	562647	562646
C 533	RR JCT BOX-FUSE BLOCK	PED	8	562647	562646
C 534	RR JCT BOX-FUSE BLOCK	PED	8	562647	562646
C 535	RR JCT BOX-FIRE MODULE DETECT.	AMP MNL	3	561667	561550
C 536	UNDER DASH RH-DRIVER'S HTR TEMP. CTR	AMP MNL	6	561552	561515
C 537	BATT. CPT.-A/C PRESS. SIGN. RLY	AMP MNL	2	561248	561247
C 538	FR SERVICE CPT.-OUTSIDE TEMP. SENSOR	AMP MNL	2	561248	561247
C 539	RH DASH PANEL-THERMOMETER SOUND	AMP MNL	2	561248	561247
C 540	RH DASH PANEL-THERMOMETER SOUND	AMP MNL	2	561248	561247
C 543	RR JCT BOX-PARK. BRAKE STOP LTS RESIS.	PED WP	2	561566	561690
C 544	SOUND SYS JCT PANEL-AUDIO SEAT SYS.	PED WP	3	561781	562428
C 545	RH HAT RACK-AUDIO SEAT SYSTEM	AMP MNL	3	561667	561550
C 546	LH DASH PANEL-ACCESSORIES	AMP CPC	37	561645	561646
C 547	RH DASH PANEL-ACCESSORIES	AMP CPC	37	561645	561646
C 548	LH DASH PANEL-T.T. LT. TEST SW.	SWF	8	------	561107

NO	LOCATION	TYPE	CAVITY	#PIN HOUSING	#SOCKET HOUSING

CONNECTORS CODE

NO	LOCATION	TYPE	CAVITY	#PIN HOUSING	#SOCKET HOUSING
C A	RR JCT BOX-ECU WORLD TR.	T & BET	34	------	562419
C B	RR JCT BOX-ECU WORLD TR.	T & BET	34	------	562420
C 1	FR JCT BOX COMPARTMENT	AMP CPC	14	561585	561584
C 2	FR JCT BOX COMPARTMENT	AMP CPC	16	561639	561640
C 3	FR JCT BOX COMPARTMENT	AMP CPC	24	561641	561643
C 4	FR JCT BOX COMPARTMENT	AMP CPC	37	561644	561646
C 5	FR SERVICE COMPT.-UNDERNEATH	AMP CPC	37	561644	561646
C 6	FR SERVICE COMPT.-UNDERNEATH	AMP CPC	16	561639	561640
C 8	FR SERVICE COMPT.-UNDERNEATH	AMP CPC	24	561641	561643
C 9	FR SERVICE COMPT.-UNDERNEATH	AMP CPC	24	561641	561643
C 11	FR SERVICE COMPARTMENT	AMP CPC	37	561644	561646
C 12	FR SERVICE COMPARTMENT	AMP CPC	16	561639	561640
C 12	LH CONSOLE-HEATER MIR.	AMP MNL	2	561248	561247
C 13	LH CONSOLE-CTR MIRROR	AMP MNL	6	561552	561515
C 14	UNDER DASH-LH MIRROR	AMP MNL	9	561661	561662
C 15	RR JCT BOX	AMP CPC	24	561641	561643
C 15	UNDER DASH-RH MIRROR	AMP MNL	9	561661	561662
C 16	LH CONSOLE SW-CRUISE ON OFF	SWF	8	------	561107
C 17	LH CONSOLE SW-CRUISE RESUME	SWF	8	------	561107
C 18	LH CONSOLE SW-CRUISE SET	SWF	8	------	561107
C 20	RR JCT BOX	AMP CPC	37	561644	561646
C 21	RR JCT BOX	AMP CPC	24	561641	561643
C 26	HYD & MAN TRANSM.-NEUT.& B/U	PED WP	4	561610	561611
C 27	HYD & MAN TRANSM.-SPEED SENS.	PED WP	2	561566	561690
C 32	DDEC ENGINE-ECM	PED	30	------	561600
C 35	RR JCT BOX	AMP CPC	24	561642	561643
C 36	EMERGENCY EXIT LTS	AMP MNL	2	560900	560898
C 37	RR SECTION-LH HAT RACK	AMP MNL	9	561661	561662
C 38	RR SECTION-RH HAT RACK	AMP MNL	9	561661	561662
C 41	LAVATORY ROOF FLUORESCENT	AMP MNL	2	560900	560898
C 42	LAVATORY BACK WALL-WTR TANK	AMP MNL	2	560900	560898
C 43	LAVATORY BACK WALL-ACCES.	AMP MNL	9	561661	561662
C 45	FR JCT BOX COMPARTMENT	AMP CPC	24	561642	561643
C 47	FR SERVICE COMPARTMENT	AMP CPC	16	561694	561695
C 49	BATTERIE COMPT.-LT	AMP MNL	2	561248	561247
C 50	FR SERVICE COMPT.-LOW BUOY	PED WP	1	561605	561577
C 52	RR JCT BOX	AMP CPC	22	561709	561710
C 55	RH SWITCH PANEL	AMP CPC	9	561636	561637
C 60	RR JCT BOX COMPT.-LT	AMP MNL	2	561248	561247
C 61	LUGGAGE COMPARTMENT LTS	AMP MNL	2	561248	561247
C 62	LUGGAGE COMPARTMENT LTS	AMP MNL	2	561248	561247
C 63	LUGGAGE COMPARTMENT LTS	AMP MNL	2	561248	561247
C 64	LUGGAGE COMPARTMENT LTS	AMP MNL	2	561248	561247
C 65	LUGGAGE COMPARTMENT LTS	AMP MNL	2	561248	561247
C 66	LUGGAGE COMPARTMENT LTS	AMP MNL	2	561248	561247
C 67	LUGGAGE COMPARTMENT LTS	AMP MNL	2	561248	561247
C 68	LUGGAGE COMPARTMENT LTS	AMP MNL	2	561248	561247
C 69	RR AXLE ACC-INSIDE PVC END	PED WP	6	561568	561578
C 70	LH CONSOLE	AMP CPC	24	561642	561643
C 71	FR JCT BOX COMPARTMENT	AMP CPC	37	561645	561646
C 72	FR JCT BOX COMPARTMENT	AMP CPC	24	561642	561643
C 73	DASH CENTER PANEL	AMP CPC	16	561639	561640
C 74	FR JCT BOX COMPARTMENT	AMP CPC	37	561645	561646
C 76	LUGGAGE COMPT. AIR RET.SENS	AMP MNL	2	561248	561247
C 77	LUGGAGE COMPT.-AIR RET.SENS.	AMP MNL	2	561248	561247
C 80	LUGGAGE COMPT.-AIR RET.SENS.	AMP MNL	2	561248	561247
C 81	PASSENGER COMPT.-AISLE LTS	AMP MNL	2	560900	560898
C 82	ENTRANCE DOOR	MOLEX	6	562070	562069
C 83	ENTRANCE DOOR-PROIMITY SW	MOLEX	4	561477	561476
C 84	ENTRANCE DOOR-PRESSURE SW	PED WP	2	561566	561690
C 85	UNDER INSTRUMENT PANEL LH	AMP MTA-100 8	------	562248	------
C 87	RR END ROOF	AMP CPC	9	561636	561637
C 88	RR END ROOF-CLEARANCE LTS	AMP MNL	2	560900	560898
C 89	RR END ROOF-B/U NONITOR	AMP CPC	4	561582	561581
C 90	RR JCT BOX	AMP CPC	15	561987	561986

NO	LOCATION	TYPE	CAVITY	#PIN HOUSING	#SOCKET HOUSING
C 91	RR JCT BOX	AMP CPC	37	561714	561713
C 92	FR LH UPPER WHELL CPT-ABS	AMP CPC	9	561635	561637
C 93	FR LH UPPER WHELL CPT-ABS	WABCO	35	------	641094
C 96	FR AXLE ACCESSORIES	AMP CPC	14	561585	561585
C 97	RR AXLE ACC-INSIDE PVC END	PED WP	6	561568	561578
C 98	FR SERVICE COMPT-EL.FT.PEDAL	PED WP	3	561782	561781
C 99	FR SERVICE COMPT LTS	AMP MNL	2	561248	561247
C 101	FR SERVICE COMPT-ELEC. HORNS	PED WP	2	561566	561690
C 102	FR SERV & SIDE CPT-FLASH. LH	GROTE	2	------	562155
C 103	FR SERV & SIDE CPT-MARKERS	GROTE	2	------	562155
C 104	FR SERV & SIDE CPT-FLASH. RH	GROTE	2	------	562155
C 105	FR SERVICE COMPT-LIQ.S.VALVE	PED WP	2	561566	561690
C 106	FR SERVICE COMPT-WATER VALVE	PED WP	2	561566	561690
C 107	EVAPORATOR COMPT-DAMPER	PED WP	2	561566	561690
C 108	FR SERVICE COMPT-KNEEL.SYS	PED WP	2	561566	561690
C 109	FR SERVICE COMPT-KNEEL.SYS	PED WP	2	561566	561690
C 110	FR SERVICE COMPT-KNEEL.SYS	PED WP	2	561566	561690
C 111	EVAPORATOR COMPT-DAMPER	DEUTSCH	2	562486	562485
C 112	EVAPORATOR COMPT-SPEED MOT CTRL	DEUTSCH	5	------	562566
C 113	BATT. & RR J.B.CPT.MARKER LT	GROTE	2	------	562155
C 114	RR J. BOX CPT DOOR DIR LT LH	GROTE	2	------	562155
C 115	ENGINE COMPT-AIR DRYER	PED WP	2	561566	561690
C 116	ENGINE COMPT. LTS	PED WP	1	561605	561577
C 118	ENGINE COMPT-LAVATORY FAN	TC	2	561030	560997
C 119	ENGINE CPT RR DOOR RH LO LAMP	PED WP	6	561606	561607
C 120	ENGINE CPT RR DOOR LH LO LAMP	PED WP	6	561606	561607
C 121	BATTERIE CPT. DOOR DIR LT RH	GROTE	2	------	562155
C 122	ENGINE CPT-UNLOAD TAG SYSTEM	PED WP	2	561566	561690
C 123	TAG AXLE-UNLOAD TAG RH VALVE	PED WP	2	561566	561690
C 124	ENGINE CPT-ETHER SW	PED WP	2	561566	561690
C 125	ENGINE CPT-B/U ALARM	PED WP	2	561566	561690
C 126	ENGINE CPT-FLUSHING PUMP	PED WP	2	561566	561690
C 127	ENGINE CPT-FUEL FILTER	PED WP	2	561566	561690
C 128	ENGINE CPT-A/C COMPR.CLUTCH	ITT SS	2	561813	561812
C 129	ENGINE CPT-PRE-HEAT WATER	AMP FF	6	561672	561186
C 130	ENGINE CPT-UNLOADER	ITT SS	2	561813	561812
C 131	ENGINE CPT-UNLOADER	ITT SS	2	561813	561812
C 132	ENGINE CPT-A/C LO PRESS SW	PED WP	2	561566	561690
C 133	ENGINE CPT-A/C HI PRESS SW	PED WP	2	561566	561690
C 134	FR JCT BOX-LUGGAGE DIODE CON.	AMP MNL	15	561987	561986
C 135	FR JCT BOX-LUGGAGE DIODE CON.	AMP MNL	15	561987	561986
C 137	RR JCT BOX-TRANSMITTER	AMP MNL	2	560900	560898
C 138	RR JCT BOX-CONTROL MODULE	AMP HDP	15	------	562012
C 139	RR JCT BOX-LOGIC MODULE	AMP HDP	15	562011	------
C 142	LAVATORY DOOR WALL	AMP MNL	2	561248	561247
C 143	LAVATORY DOOR WALL	AMP MNL	3	560908	562006
C 144	UNDER LH SEAT-AISLE LTS	AMP MNL	4	560851	560852
C 145	RR JCT BOX CPT-RR SIDE LTS	AMP MNL	9	561670	561669
C 146	ENGINE CPT-MODULATOR VALVE	AMPHENOL	2	------	560412
C 147	BATT & RR J.B.CPT-DOCK.LTS	PED WP	2	561566	561690
C 149	CONDENSER CPT-FAN MOTOR	ORDNANCE	3	562555	562001
C 151	EVAPORATOR CPT-THERMOSTAT	ITT SS	2	561813	562159
C 152	CONDENSER CPT-FUEL GAUGE	PED WP	4	561610	561611
C 153	EVAPORATOR CPT-AIR AMB. SENS	AMP MNL	2	561248	561247
C 154	EVAPORATOR CPT-FRESH AIR SENS	ITT SS	2	561813	561812
C 155	EVAPORATOR CPT-WATER VALVE	PED WP	4	561610	561611
C 156	EVAPOR. CPT-BYPASS WATER VAL.	PED WP	2	561566	561690
C 157	EVAPORATOR CPT-WATER PUMP	PED WP	2	561566	561690
C 158	CONDENSER CPT-A/C LO TEMP.	PED WP	2	561566	561690
C 159	CONDENSER CPT-A/C HI TEMP.	PED WP	2	561566	561690
C 160	FR AXLE-ABS RH SENSOR	WABCO	2	641132	------
C 161	FR AXLE-ABS RH VALVE	WABCO	3	------	641098
C 162	FR AXLE-ABS LH VALVE	WABCO	3	------	641098
C 163	FR AXLE-ABS LH SENSOR	WABCO	2	641132	------
C 164	RR AXLE-ABS LH SENSOR	DEUTSCH	2	562486	562485

CONNECTORS CODE

NO	LOCATION	TYPE	CAVITY	#PIN HOUSING	#SOCKET HOUSING
C 165	RR AXLE-ABS LH VALVE	WABCO	3	------	641098
C 166	RR AXLE-ABS RH VALVE	WABCO	3	------	641098
C 167	RR AXLE-ABS RH SENSOR	DEUTSCH	2	562486	562485
C 168	RR AXLE-ABS OPT ATC	PED WP	4	561610	561611
C 169	RR JCT BOX-SPEED SW	AMP HDP	15	------	562012
C 170	FR JCT BOX-FLASHER UNIT	TC	2	------	561940
C 171	LH CONSOLE	AMP CPC	37	561645	561646
C 172	ENGINE COMPT-WATER TANK HEAT.	PED WP	2	561566	561690
C 173	LAV.POTABLE-WATER TANK HEAT.	AMP MNL	2	560900	560898
C 174	UNDER DASH RH-HTR MODULE	AMP MNL	9	561670	561669
C 175	UNDER DASH RH-HTR MODULE	AMP MNL	9	561670	561669
C 176	UNDER DASH RH-WIPER PULSE	AMP FF	6	------	561186
C 177	UNDER DASH RH-WIPER MOTOR	AMP FF	6	------	561186
C 178	UNDER DASH RH-LH FAN	TC	2	561030	560997
C 179	UNDER DASH RH-RH FAN	TC	2	561030	560997
C 181	RR JCT BOX-DIODE CONNECTOR	AMP MNL	15	561987	561986
C 182	RR JCT BOX COMPT.-WT VIW	AMP CPC	16	561639	561640
C 183	FR SERVICE CPT-KNEELING PAN.	PED WP	4	561610	561611
C 184	FR SERVICE CPT-KNEELING SW	ITT SS	3	561111	561080
C 185	RR JCT BOX COMPT.-WT VIM	PLO	30	------	561600
C 186	RR JCT BOX CPT.-SPEED SIGN.TR	PED WP	2	561566	561690
C 186M	RR JCT BOX CPT.-SPD SIGN. M.TR	PED WP	2	561566	561690
C 186W	RR JCT BOX CPT.-SPD SIGN. WT	PED WP	2	561566	561690
C 187	FR JCT BOX-RPM RESISTOR CON.	AMP MNL	6	561552	561515
C 189	ENGINE CPT RR DOOR B/U LT	PED WP	2	561566	561690
C 190	ENGINE CPT RR DOOR TAIL LT	PED WP	2	561566	561690
C 191	ENGINE CPT RR DOOR RH STOP LT	PED WP	2	561566	561690
C 192	ENGINE CPT RR DOOR RH DIR. LT	PED WP	2	561566	561690
C 193	FR SECT. LH HAT RACK-FLUOR.	AMP MNL	2	561248	561247
C 194	ENGINE CPT RR DOOR LH DIR. LT	PED WP	2	561566	561690
C 195	ENGINE CPT RR DOOR LH STOP LT	PED WP	2	561566	561690
C 196	ENGINE CPT RR DOOR CYCLOP LT	PED WP	2	561566	561690
C 199	ENGINE CPT RR DOOR LICENCE LT	DOM AUTO	2	930210	------
C 200	RH HAT RACK-FLUORESCENT	AMP MNL	4	561551	561668
C 201	RH HAT RACK-FLUORESCENT	AMP MNL	4	561551	561668
C 202	RH HAT RACK-BALLAST	AMP MNL	4	560851	560852
C 203	RH HAT RACK-BALLAST	AMP MNL	6	561552	561515
C 204	RH HAT RACK-GENERAL LT	AMP MNL	3	561667	561550
C 205	FR SECT.-RH HAT RACK SPEAKER	AMP MNL	9	561661	561662
C 206	RH HAT RACK-READING LT	AMP MNL	2	560900	560898
C 207	LH HAT RACK-READING LT	AMP MNL	2	560900	560898
C 208	LH HAT RACK-BALLAST	AMP MNL	4	560851	560852
C 210	FR SECT.-LH HAT RACK SPEAKER	AMP MNL	9	561661	561662
C 211	FR ROOF-STORE LH	AMP MNL	2	560900	560898
C 212	FR ROOF-STORE RH	AMP MNL	2	560900	560898
C 213	FR ROOF-CLEARANCE LT	AMP MNL	2	560900	560898
C 220	RR.JCT.BOX-FUEL PRIME PUMP	TC	1	561070	561073
C 225	FR SECT. RH HAT RACK-FLUOR.	AMP MNL	2	561248	561247
C 230	ENG.CPT.-FUEL PRIME PUMP FEED	DEUTSCH	2	562486	562485
C 231	ENG.CPT.-FUEL PRIME PUMP SW.	PED WP	2	561566	561690
C 232	ENG.CPT.-FUEL PRIME PUMP	PED WP	2	561566	561690
C 233	INSTRUMENT PANEL CENTER	V.D.O.	8	------	562043
C 234	INSTRUMENT PANEL CENTER	V.D.O.	4	------	562044
C 235	INSTRUMENT PANEL CENTER	V.D.O.	8	------	562041
C 236	INSTRUMENT PANEL CENTER	AMP MNL	4	560851	560852
C 237	UNDER DASH LH-JACOB CLUTCH SW	ITT SS	3	561111	561080
C 238	RR JCT BOX-DIODE CONNECTOR	AMP MNL	9	561670	561669
C 239	FR SERVICE CPT-HI BUOY VALVE	PED WP	2	561566	561690
C 240	FR SERVICE CPT-KNEEL PROX SW	PED WP	2	561566	561690
C 242	FR SERVICE CPT-MARK & DIR LT	ITT SS	3	561111	561080
C 243	FR SERVICE CPT-HEADLAMPS	TC	3	------	561071
C 244	FR SERVICE CPT-LH FOG LAMP	ITT SS	2	561813	561812
C 245	FR SERVICE CPT-RH FOG LAMP	ITT SS	2	561813	561812
C 246	FR SERVICE CPT-MARK & DIR LT	ITT SS	3	561111	561080
C 248	FR JCT BOX-WIPER PULSE GEN	AMP FF	6	------	561108

NO	LOCATION	TYPE	CAVITY	#PIN HOUSING	#SOCKET HOUSING
C 251	LH SW PANEL-FAST IDLE	SWF	8	------	561107
C 252	LH SW PANEL-SWITCH LT	SWF	2	------	561837
C 253	LH SW PANEL-ETHER	SWF	8	------	561107
C 254	INST. PANEL RH-ENTR.DOOR SW.	TORRIX	5	------	562110
C 255	LH SW PANEL-JACOB	SWF	8	------	561107
C 257	INSTRUMENT PANEL CENT-TACHO	AMP FF	8	------	562363
C 258	LH SW PANEL-MULTI FUNC. SW	AMP FF	8	561168	------
C 259	LH SW PANEL-MULTI FUNC. SW	AMP FF	6	------	561108
C 260	FR SERVICE CPT-LUG DOOR LCK	PED WP	6	561606	561607
C 261	UNDER DASH RH-DOOR MODULE	AMP MNL	9	561670	561669
C 262	UNDER DASH RH-DOOR MODULE	AMP MNL	4	561551	561668
C 263	UNDER DASH RH-DOOR MODULE	AMP MNL	3	561667	561550
C 264	UNDER DASH RH-DOOR MODULE	AMP MNL	3	561667	561550
C 265	UNDER DASH RH-DOOR MODULE	AMP HDP-20	15	562011	562012
C 267	UNDER DASH RH	AMP CPC	24	561642	561643
C 268	UNDER DASH LH-MIRROR	AMP MNL	6	561552	561515
C 269	UNDER DASH RH-MIRROR	AMP MNL	6	561552	561515
C 270	LH MIRROR POST	MOLEX	6	562070	562069
C 271	RH MIRROR POST	MOLEX	6	562070	562069
C 272	LH MIRROR	SPARTAN	6	------	990158
C 273	RH MIRROR	SPARTAN	6	------	990158
C 275	UNDER DASH RH-DOOR MODULE	AMP MNL	9	561670	561669
C 276	UNDER DASH RH-LOCK SOL.VALVE	AMP MNL	2	561248	561247
C 279	UNDER DASH CYLINDER READ SW.	AMP MNL	2	561248	561247
C 280	LH CONSOLE-UNLOAD TAG SW.	SWF	8	------	561107
C 286	RH SW PANEL-A/C & HEAT	SWF	8	------	561107
C 287	ENGINE COMPT-LTS SW	PED WP	2	561566	561690
C 288	RH SW PANEL-FRESH AIR	SWF	8	------	561107
C 289	RH SW PANEL-SWITCH LT	SWF	2	------	561837
C 297	INSTRUMENT PANEL RH -LTS	AMP MNL	2	560900	560898
C 299	LH CONSOLE SW-GALLEY	SWF	8	------	561107
C 301	INSTRUMENT PANEL CENT-TACHO	AMP FF	8	------	562363
C 308	LH CONSOLE SW-RHEOSTAT	TC	2	561030	560997
C 309	DDEC ENGINE-ECM POWER CON.	PED MP	5	------	562345
C 310	LH CONSOLE SW-LUG. DOOR LCK	SWF	8	------	561107
C 311	LH CONSOLE SW-HOS & PAS CHIME	SWF	8	------	561107
C 312	LH CONSOLE SW-READING LTS	SWF	8	------	561107
C 313	LH CONSOLE SW-GEN & FLUOR LTS	SWF	8	------	561107
C 314	LH CONSOLE SW-FR DEST. SIGN	SWF	8	------	561107
C 315	LH CONSOLE SW-LH STORE	SWF	8	------	561107
C 316	LH CONSOLE SPARE SWITCH	SWF	8	------	561107
C 317	LH CONSOLE SW-RH STORE	SWF	8	------	561107
C 318	LH CONSOLE SW-DRV WINDOW LIFT	SWF	8	------	561107
C 320	LH CONSOLE SW-DRIVER'S LTS	SWF	8	------	561107
C 322	LH CONSOLE DRV WIND LIFT MOT	PED PO	2	------	561848
C 323	LH CONSOLE CRUISE CTR SW PAN. AMP	CPC	9	561636	561637
C 325	LH CONSOLE SW-KNEELING	SWF	8	------	561107
C 326	LH CONSOLE SW-SPARE	SWF	8	------	561107
C 327	ENGINE CONTROL	DEUTSCH	6	562583	562581
C 328	GALLEY-LAMP	AMP MNL	2	561248	561247
C 329	ENGINE TACHO SIGNAL	PED WP	3	561781	561789
C 330	GALLEY MICROWAVE SW LT	SWF	2	------	561837
C 331	GALLEY MICROWAVE SW	SWF	8	------	561107
C 332	GALLEY RH CONTAINER SW LT	SWF	2	------	561837
C 333	GALLEY RH CONTAINER SW	SWF	8	------	561107
C 334	GALLEY LH CONTAINER SW	SWF	8	------	561107
C 335	GALLEY LH CONTAINER SW LT	SWF	2	------	561837
C 337	INSTR PANEL LH-UP WIPER SW	SWF	8	------	561107
C 338	INSTR PANEL LH-UP DEFROST SW	SWF	8	------	561107
C 339	INSTR PANEL LH-UP WASHER SW	SWF	8	------	561107
C 340	FR JCT. BOX FIRE PIEZO ALARM	AMP MNL	2	560900	560898
C 341	INSTR PANEL LH-HEAT MIRROR SW	SWF	8	------	561107
C 342	ENGINE RR START SW	DEUTSCH	2	562586	562585
C 343	INSTR PANEL LH-HEADLAMP SW	SWF	8	------	561107
C 344	INSTR PANEL LH-HAZARD LT SW	SWF	8	------	561107

CONNECTORS CODE

NO	LOCATION	TYPE	CAVITY	#PIN HOUSING	#SOCKET HOUSING
C 343	INSTR PANEL LH-HEADLAMP SW	SWF	8	------	561107
C 344	INSTR PANEL LH-HAZARD LT SW	SWF	8	------	561107
C 345	INSTR PANEL LH-FOG LT SW	SWF	8	------	561107
C 346	INSTR PANEL LH-SWITCH LTS	SWF	2	------	561837
C 347	INSTR PANEL LH-DASH LT SW	AMP MNL	2	560900	560898
C 348	INSTR PANEL CENT-RACOR MODULE	MOLEX	6	562070	562067
C 350	RH CONSOLE-THERMOMETER	AMP MNL	3	561667	561550
C 351	LH HAT RACK-FLUOR 110V	MOLEX	4	561477	561476
C 352	RH CONSOLE-DRV TEMP SENSOR	BURNDY	4	------	561104
C 353	INSTR PANEL RH-DRV FAN RHEOST	AMP MNL	6	561552	561515
C 354	INSTR PANEL RH-DRV TEMP CTR	AMP MNL	6	561552	561515
C 355	INSTR PANEL RH-FR TEMP CTR	AMP MNL	3	561667	561550
C 357	INSTR PANEL RH-WATER TEMP GA	AMP MNL	3	561667	561550
C 358	INSTR PANEL RH-FUEL LEVEL GA	AMP MNL	3	561667	561550
C 361	FR ROOF-WIPER MOTOR	AMP FF	6	------	561186
C 362	FR ROOF-LAVATORY OCCUPIED LT	AMP MNL	2	561248	561247
C 363	FR ROOF-WATCH YOUR STEP LT	AMP MNL	2	561248	561247
C 364	FR ROOF-DESTINATION SIGN	AMP MNL	3	561667	561550
C 365	FR ROOF-UP WINDSHIELD DEFROST	AMP MNL	3	561667	561550
C 366	RH DASH PANEL-GRN & RED LEDS	AMP MNL	3	560908	562006
C 367	ENGINE COMPT-DIF OIL T SENSOR	PED WP	2	561566	561690
C 368	FR ROOF-DEST. SIGN BALLAST	AMP MNL	3	561667	561550
C 369	FR ROOF-DEST. SIGN OPER. SW	TORRIX	5	------	562110
C 370	FR ROOF-DEST. SIGN FLUOR.	AMP MNL	2	560900	560898
C 371	FR ROOF-DEST. SIGN FLUOR.	AMP MNL	2	560900	560898
C 372	FR ROOF-DEST. SIGN SPEED SW	MOLEX	4	561477	561476
C 373	FR ROOF-NO SMOKING LT	AMP MNL	2	561248	561247
C 374	LH SWITCH PANEL	AMP MNL	6	561552	561515
C 376	LH SWITCH PANEL	AMP CPC	37	561714	562005
C 377	LH SW PANEL-STOP ENG.OVERIDE	SWF	8	------	561107
C 380	LH CONSOLE-DDR CONNECTOR	DEUTSCH	6	562360	------
C 386	LH CONSOLE-WCL POWER SYSTEM	SWF	8	------	561107
C 387	RR JCT BOX (WCL)	AMP MNL	9	561661	561662
C 388	RR JCT BOX (WCL)	AMP MNL	12	561735	561734
C 389	WCL REAR DOOR	MOLEX	4	561477	561476
C 390	LAVATORY WALL-WCL REMOTE CTR	SWF	8	------	561107
C 391	LAVATORY WALL-WCL LAMP	SWF	8	------	561107
C 392	LAVATORY WALL-WCL SW. LT.	SWF	2	------	561835
C 393	LAVATORY WALL-WCL REMOTE SYS.	AMP CPC	4	561686	561687
C 394	UNDER INSTR. PANEL- B/U MONITOR	AMP MNL	4	560851	560852
C 395	DRIVER'S COMPT. - B/U MONITOR	AMP	5	------	------
C 396	FR SECT. LH HAT RACK-SPEAKER	MOLEX	4	562507	562503
C 397	ENGINE COMPT. CRADLE ACC.	DEUTSCH	40	562281	562284
C 400	ENGINE COMPT. BLOCK HEATER	PED MP	3	561781	561782
C 402	RR DRIVE AXLE-AIR DRYER	PED MP	2	------	562251
C 403	GALLEY FRIGO NORCOLD	AMP MNL	2	561248	561247
C 404	GALLEY LAMP	AMP MNL	2	561248	561247
C 406	FR JCT BOX COMPT.-ABS	AMP MNL	2	560900	560898
C 407	ENGINE COMPT. -SIGNAL	PED WP	6	561606	561607
C 408	ENGINE COMPT. -SIGNAL	PED WP	6	561606	561607
C 409	ENGINE CPT -LOW COOL. LEVEL	PED MP	2	------	562350
C 410	FR JCT BOX-DIODE CONNECTOR	AMP MNL	15	561987	561986
C 411	FR JCT BOX-DIODE CONNECTOR	AMP MNL	15	561987	561986
C 412	LH SW PANEL-MASTER SWITCH	SWF	8	------	561107
C 413	ENG CPT-A/C HI UNLOAD PRS SW	PED WP	2	561566	561690
C 414	RR JCT BOX	AMP MNL	9	561670	561669
C 415	ENGINE CRADLE-FAN SIGNAL	PED WP	3	561781	561782
C 416	ENGINE CRADLE-FAN SIGNAL	PED P-C	3	562237	------
C 417	FRONT JCT BOX-DIODES	AMP MNL	15	561987	561986
C 418	INSTR. PANEL LH-HTR WINDSH.SW	SWF	8	------	561107
C 419	FR JCT BOX-RETARDER OR JACOB	AMP MNL	3	561667	561550
C 420	ENGINE COMPT. WEBASTO WATER HTR	TC	2	561597	------
C 421	ENGINE COMPT. WEBASTO WATER HTR	TC	1	561073	------
C 422	ENGINE COMPT. WEBASTO WATER HTR	TC	2	561597	------
C 424	UNDER INSTRUMENT PANEL CENTER	AMP MNL	3	561667	561550

NO	LOCATION	TYPE	CAVITY	#PIN HOUSING	#SOCKET HOUSING
C 425	FR JCT BOX-DIODES	AMP MNL	15	561987	561986
C 426	ENGINE COMPT. CLUTCH CTR FAN	PED WP	3	561781	561782
C 429	FR JCT BOX COMPT.	AMP MNL	6	561552	561515
C 430	LH CONSOLE-TIMER	AMP FF	8	561188	562363
C 431	LH CONSOLE-PRE HEAT.	TAB AMP	1	561540	561539
C 432	ENGINE CPT.-PROX. SW. DOOR AJAR	DEUTSCH	4	562479	562477
C 433	FR SERVICE CPT. KNEEL. PRESS. SW	PED WP	2	561566	561690
C 434	FRONT JCT. BOX-DIODES	AMP MNL	15	561987	561986
C 435	FR SERVICE CPT.(RH) KNEEL. PIEZO	AMP MNL	2	560900	560898
C 436	RH HAT RACK-WCL CENTER ROOF ACC	AMP CPC	16	561639	561640
C 437	RH HAT RACK-WCL FR & RR SECT.	AMP CPC	24	561642	561643
C 450	SOUND SYS. JCT. PANEL	MOLEX	4	562507	562503
C 451	WIRELESS MICRO-FIRST CPT BAG	MOLEX	2	562550	562549
C 452	UNDER DASH INSTR. PANEL	MOLEX	2	562550	562549
C 453	SOUND SYS. JCT.PANEL-VCP	PED WP	2	561566	561680
C 454	SOUND SYS.JCT.PAN.-FILT. VCP	PED WP	2	561566	561680
C 455	WIRELESS MICRO-LH HAT-RACK	CINCH	2	562554	562551
C 456	WORLD TRANSM.-RETARDER ACCUM.	PED MP	2	------	562427
C 457	WORLD TRANSM.-MAIN CONNECTOR	DEUTSCH	31	562572	562536
C 458	WORLD TRANSM.-TURBINE SP.SENS	PED MP	2	------	562426
C 459	WORLD TRANSM.-ENGINE SP.SENS.	PED MP	2	------	562426
C 460	WORLD TRANSM.-SPEED SENSOR	ITT	2	------	562541
C 461	WORLD TRANSM.-RETARDER TEMP.	PED MP	2	561566	561680
C 462	WORLD TRANSM.-RETARD SOL."K"	PED MP	2	------	562426
C 463	WORLD TRANSM.-SENSOR CONN.	DEUTSCH	16	562570	562571
C 464	RR JCT BOX-DDL CONN W.T.	PED MP	12	------	562574
C 465	LH CONSOLE-SHIFTER SELECTOR	T & BET	10	------	562429
C 466	FR SERVICE CPT.-RESIS. MOD.	PED WP	3	------	562428
C 467	FR SERVICE CPT.-RESIS. MOD.	PED WP	3	------	562428
C 468	RR JCT BOX-VIM MOD. W.T.	PED MP	18	------	562573
C 470	FR LH UPPER WHELL CPT-SILENT 1000	AMP MNL	2	561248	561247
C 471	FR LH UPPER WHELL CPT-SILENT 1000	AMP MNL	2	561248	561247
C 472	FR LH UPPER WHELL CPT-SILENT 1000	PED WP	2	561566	561690
C 473	FR LH UPPER WHELL CPT-SILENT 1000	AMP MNL	3	561667	561550
C 474	LUGGAGE CPT.-TEMP. SENSOR	AMP MNL	2	561247	561248
C 475	RR JCT BOX-SPEED SIGN CONNECTOR	AMP MNL	2	561248	561247
C 475M	RR JCT BOX-SPEED SIGN MANUAL TR.	MOLEX	6	562070	562069
C 475W	RR JCT BOX-SPEED SIGN WORLD TR.	MOLEX	6	562070	562069
C 476	RR JCT BOX-VIM WORLD TRANSM.	AMP CPC	16	561639	561640
C 477	RR JCT BOX-WORLD TR. SHIFT.&RET.	AMP CPC	9	561636	561637
C 478	ELECTRONIC DESTINATION SIGN	AMP CPC	9	561636	561637
C 483	FR SERVICE CPT. (NOT USED)	PED PC	2	------	562237
C 500	FR LH UPPER WHELL CPT -PRODRIVER	MOLEX	6	562070	562069
C 501	FR LH UPPER WHELL CPT -PRODRIVER MOD	PED MP	7	562433	------
C 502	LH CONSOLE-PRE HEATER SW.	SWF	8	------	561107
C 503	LH CONSOLE-PRE HEATER SW.	SWF	2	------	561837
C 504	LH CONSOLE WEBASTO TIMER	AMP	8	561188	562363
C 505	LH CONSOLE ESPAR TIMER	AMP	12	------	562681
C 506	FR JCT BOX CPT. DIGITAL CLOCK	AMP	4	561685	561687
C 507	FR SECT. LH HAT-RACK DIG. CLOCK	MOLEX	4	561477	561476
C 508	RR JCT BOX-FAN CLUTCH RETARDER	AMP MNL	6	561552	561515
C 509	FR LH UPPER WHELL CPT -DATA LOGGER	PED MP	16	------	562530
C 510	FR LH UPPER WHELL CPT -DATA LOGGER	DEUTSCH	9	562531	------
C 511	FR LH UPPER WHELL CPT -DATA LOGGER	PED MP	4	562532	------
C 512	FR LH UPPER WHELL CPT -DATA LOGGER	PED MP	10	562533	------
C 513	FR LH UPPER WHELL CPT -DATA LOGGER	AMP MNL	3	561667	561550
C 514	FR LH UPPER WHELL CPT -DATA LOGGER	PED MP	6	562433	562417
C 515	RH DASH PANEL-T.T.LT.	AMP CPC	14	561585	561583
C 515	FR JCT BOX CPT.-INTERCOM	MOLEX	4	561477	561476
C 516	CENTER DASH PANEL -UPPER T.T.LT.	AMP CPC	24	561642	561643
C 516	FR JCT BOX CPT.-INTERCOM	MOLEX	6	562070	562069
C 517	CENTER DASH PANEL -LOWER T.T.LT.	AMP CPC	24	561642	561643
C 517	LAVATORY WALL-INTERCOM	MOLEX	6	562070	562069
C 519	UNDER DASH RH-SEDAN DOOR	HUMPHREY	2	------	562580
C 520	UNDER DASH RH-SEDAN DOOR	HUMPHREY	2	------	641385

CONNECTORS CODE

NO	LOCATION	TYPE	CAVITY	#PIN HOUSING	#SOCKET HOUSING
C 521	UNDER DASH RH-SEDAN DOOR	HUMPHREY	2	------	641385
C 522	FR JCT BOX-DAYTIME LTS MODULE	BOSCH	5	------	561183
C 523	FR JCT BOX-FUSE BLOCK	PED	8	562647	562646
C 524	FR JCT BOX-FUSE BLOCK	PED	8	562647	562646
C 525	FR JCT BOX-FUSE BLOCK	PED	8	562647	562646
C 526	FR JCT BOX-FUSE BLOCK	PED	8	562647	562646
C 527	FR JCT BOX-FUSE BLOCK	PED	8	562647	562646
C 528	FR JCT BOX-FUSE BLOCK	PED	8	562647	562646
C 529	FR JCT BOX-12V OUTLET	AMP MNL	2	561247	561248
C 530	RR JCT BOX-FUSE BLOCK	PED	8	562647	562646
C 531	RR JCT BOX-FUSE BLOCK	PED	8	562647	562646
C 532	RR JCT BOX-FUSE BLOCK	PED	8	562647	562646
C 533	RR JCT BOX-FUSE BLOCK	PED	8	562647	562646
C 534	RR JCT BOX-FUSE BLOCK	PED	8	562647	562646
C 535	RR JCT BOX-FIRE MODULE DETECT.	AMP MNL	3	561667	561550
C 536	UNDER DASH RH-DRIVER'S HTR TEMP. CTR	AMP MNL	6	561552	561515
C 537	BATT. CPT.-A/C PRESS. SIGN. RLY	AMP MNL	2	561248	561247
C 538	FR SERVICE CPT.-OUTSIDE TEMP. SENSOR	AMP MNL	2	561248	561247
C 539	RH DASH PANEL-THERMOMETER SOUND	AMP MNL	2	561248	561247
C 540	RH DASH PANEL-THERMOMETER SOUND	AMP MNL	2	561248	561247
C 541	SOUND SYS. JCT PANEL-AUDIO SEAT SYS.	PED WP	2	561566	561690
C 542	LH HAT RACK-AUDIO SEAT SYSTEM	AMP MNL	3	561667	561550
C 543	RR JCT BOX-PARK. BRAKE STOP LTS RESIS.	PED WP	2	561566	561690
C 544	SOUND SYS JCT PANEL-AUDIO SEAT SYS.	PED WP	3	561781	562428
C 545	LH HAT RACK-AUDIO SEAT SYSTEM	AMP MNL	3	561667	561550
C 546	LH DASH PANEL-ACCESSORIES	AMP CPC	37	561645	561646
C 547	RH DASH PANEL-ACCESSORIES	AMP CPC	37	561645	561646
C 548	LH DASH PANEL-T.T. LT. TEST SW.	SWF	8	------	561107
C 549	LH CONSOLE-FAN CLUTCH OVERRIDE SW.	SWF	8	------	561107
C 550	EVAPORATOR COMPARTIMENT	ITT	2	561813	562159
C 551	RR JCT BOX - A/C PANEL	PED	2	561566	561690

NO	LOCATION	TYPE	CAVITY	#PIN HOUSING	#SOCKET HOUSING

CONNECTORS CODE

NO	LOCATION	TYPE	CAVITY	#PIN HOUSING	#SOCKET HOUSING
C A	RR JCT BOX-ECU WORLD TR.	T & BET	34	------	562419
C B	RR JCT BOX-ECU WORLD TR.	T & BET	34	------	562420
C 1	FR JCT BOX COMPARTMENT	AMP CPC	14	561585	561584
C 2	FR JCT BOX COMPARTMENT	AMP CPC	16	561639	561640
C 3	FR JCT BOX COMPARTMENT	AMP CPC	24	561641	561643
C 4	FR JCT BOX COMPARTMENT	AMP CPC	37	561644	561646
C 5	FR SERVICE COMPT.-UNDERNEATH	AMP CPC	37	561644	561646
C 6	FR SERVICE COMPT.-UNDERNEATH	AMP CPC	16	561639	561640
C 8	FR SERVICE COMPT.-UNDERNEATH	AMP CPC	24	561641	561643
C 9	FR SERVICE COMPT.-UNDERNEATH	AMP CPC	24	561641	561643
C 11	FR SERVICE COMPARTMENT	AMP CPC	37	561644	561646
C 12	FR SERVICE COMPARTMENT	AMP CPC	16	561639	561640
C 12	LH CONSOLE-HEATER MIR.	AMP MNL	2	561248	561247
C 13	LH CONSOLE-CTR MIRROR	AMP MNL	6	561552	561515
C 14	UNDER DASH-LH MIRROR	AMP MNL	9	561661	561662
C 15	RR JCT BOX	AMP CPC	24	561641	561643
C 15	UNDER DASH-RH MIRROR	AMP MNL	9	561661	561662
C 16	LH CONSOLE SW-CRUISE ON OFF	SWF	8	------	561107
C 17	LH CONSOLE SW-CRUISE RESUME	SWF	8	------	561107
C 18	LH CONSOLE SW-CRUISE SET	SWF	8	------	561107
C 20	RR JCT BOX	AMP CPC	37	561644	561646
C 21	RR JCT BOX	AMP CPC	24	561641	561643
C 26	HYD & MAN TRANSM.-NEUT.& B/U	PED WP	4	561610	561611
C 27	HYD & MAN TRANSM.-SPEED SENS.	PED WP	2	561566	561690
C 32	DDEC ENGINE-ECM	PED	30	------	561600
C 35	RR JCT BOX	AMP CPC	24	561642	561643
C 36	EMERGENCY EXIT LTS	AMP MNL	2	560900	560898
C 37	RR SECTION-LH HAT RACK	AMP MNL	9	561661	561662
C 38	RR SECTION-RH HAT RACK	AMP MNL	9	561661	561662
C 41	LAVATORY ROOF FLUORESCENT	AMP MNL	2	560900	560898
C 42	LAVATORY BACK WALL-WTR TANK	AMP MNL	2	560900	560898
C 43	LAVATORY BACK WALL-ACCES.	AMP MNL	9	561661	561662
C 45	FR JCT BOX COMPARTMENT	AMP CPC	24	561642	561643
C 47	FR SERVICE COMPARTMENT	AMP CPC	16	561694	561695
C 49	BATTERIE COMPT.-LT	AMP MNL	2	561248	561247
C 50	FR SERVICE COMPT.-LOW BUOY	PED WP	1	561605	561577
C 52	RR JCT BOX	AMP CPC	22	561709	561710
C 55	RH SWITCH PANEL	AMP CPC	9	561636	561637
C 58	RR JCT BOX - A/C PANEL	DEUTSCH	24	562280	562283
C 59	RR JCT BOX - A/C PANEL	AMP CPC	14	561585	561583
C 60	RR JCT BOX COMPT.-LT	AMP MNL	2	561248	561247
C 61	LUGGAGE COMPARTMENT LTS	AMP MNL	2	561248	561247
C 62	LUGGAGE COMPARTMENT LTS	AMP MNL	2	561248	561247
C 63	LUGGAGE COMPARTMENT LTS	AMP MNL	2	561248	561247
C 64	LUGGAGE COMPARTMENT LTS	AMP MNL	2	561248	561247
C 65	LUGGAGE COMPARTMENT LTS	AMP MNL	2	561248	561247
C 66	LUGGAGE COMPARTMENT LTS	AMP MNL	2	561248	561247
C 67	LUGGAGE COMPARTMENT LTS	AMP MNL	2	561248	561247
C 68	LUGGAGE COMPARTMENT LTS	AMP MNL	2	561248	561247
C 69	RR AXLE ACC-INSIDE PVC END	PED WP	6	561568	561578
C 70	LH CONSOLE	AMP CPC	24	561642	561643
C 71	FR JCT BOX COMPARTMENT	AMP CPC	37	561645	561646
C 72	FR JCT BOX COMPARTMENT	AMP CPC	24	561642	561643
C 73	DASH CENTER PANEL	AMP CPC	16	561639	561640
C 74	FR JCT BOX COMPARTMENT	AMP CPC	37	561645	561646
C 76	LUGGAGE COMPT.-AIR RET.SENS.	AMP MNL	2	561248	561247
C 77	LUGGAGE COMPT.-AIR RET.SENS.	AMP MNL	2	561248	561247
C 80	LUGGAGE COMPT.-AIR RET.SENS.	AMP MNL	2	561248	561247
C 81	PASSENGER COMPT.-AISLE LTS	AMP MNL	2	560900	560898
C 82	ENTRANCE DOOR	MOLEX	6	562070	562069
C 83	ENTRANCE DOOR-PROIMITY SW	MOLEX	4	561477	561476
C 84	ENTRANCE DOOR-PRESSURE SW	PED WP	2	561566	561690
C 85	UNDER INSTRUMENT PANEL LH	AMP MTA-100 8	------	562248	------
C 87	RR END ROOF	AMP CPC	9	561636	561637
C 88	RR END ROOF-CLEARANCE LTS	AMP MNL	2	560900	560898

NO	LOCATION	TYPE	CAVITY	#PIN HOUSING	#SOCKET HOUSING
C 89	RR END ROOF-B/U NONITOR	AMP CPC	4	561582	561581
C 90	RR JCT BOX	AMP CPC	15	561987	561986
C 91	RR JCT BOX	AMP CPC	37	561714	561713
C 92	FR LH UPPER WHELL CPT-ABS	AMP CPC	9	561635	561637
C 93	FR LH UPPER WHELL CPT-ABS	WABCO	35	------	641094
C 96	FR AXLE ACCESSORIES	AMP CPC	14	561585	561585
C 97	RR AXLE ACC-INSIDE PVC END	PED WP	6	561568	561578
C 98	FR SERVICE COMPT-EL.FT.PEDAL	PED WP	3	561782	561781
C 99	FR SERVICE COMPT LTS	AMP MNL	2	561248	561247
C 101	FR SERVICE COMPT-ELEC. HORNS	PED WP	2	561566	561690
C 102	FR SERV & SIDE CPT-FLASH. LH	GROTE	2	------	562155
C 103	FR SERV & SIDE CPT-MARKERS	GROTE	2	------	562155
C 104	FR SERV & SIDE CPT-FLASH. RH	GROTE	2	------	562155
C 105	FR SERVICE COMPT-LIQ.S.VALVE	PED WP	2	561566	561690
C 106	FR SERVICE COMPT-WATER VALVE	PED WP	2	561566	561690
C 107	EVAPORATOR COMPT-DAMPER	PED WP	2	561566	561690
C 108	FR SERVICE COMPT-KNEEL.SYS	PED WP	2	561566	561690
C 109	FR SERVICE COMPT-KNEEL.SYS	PED WP	2	561566	561690
C 110	FR SERVICE COMPT-KNEEL.SYS	PED WP	2	561566	561690
C 111	EVAPORATOR COMPT-DAMPER	DEUTSCH	2	562486	562485
C 112	EVAPORATOR COMPT-SPEED MOT CTRL	DEUTSCH	5	------	562566
C 113	BATT. & RR J.B.CPT.MARKER LT	GROTE	2	------	562155
C 114	RR J. BOX CPT DOOR DIR LT LH	GROTE	2	------	562155
C 115	ENGINE COMPT-AIR DRYER	PED WP	2	561566	561690
C 116	ENGINE COMPT. LTS	PED WP	1	561605	561577
C 118	ENGINE COMPT-LAVATORY FAN	TC	2	561030	560997
C 119	ENGINE CPT RR DOOR RH LO LAMP	PED WP	6	561606	561607
C 120	ENGINE CPT RR DOOR LH LO LAMP	PED WP	6	561606	561607
C 121	BATTERIE CPT. DOOR DIR LT RH	GROTE	2	------	562155
C 122	ENGINE CPT-UNLOAD TAG SYSTEM	PED WP	2	561566	561690
C 123	TAG AXLE-UNLOAD TAG RH VALVE	PED WP	2	561566	561690
C 124	ENGINE CPT-ETHER SW	PED WP	2	561566	561690
C 125	ENGINE CPT-B/U ALARM	PED WP	2	561566	561690
C 126	ENGINE CPT-FLUSHING PUMP	PED WP	2	561566	561690
C 127	ENGINE CPT-FUEL FILTER	PED WP	2	561566	561690
C 128	ENGINE CPT-A/C COMPR.CLUTCH	ITT SS	2	561813	561812
C 129	ENGINE CPT-PRE-HEAT WATER	AMP FF	6	561672	561186
C 130	ENGINE CPT-UNLOADER	ITT SS	2	561813	561812
C 131	ENGINE CPT-UNLOADER	ITT SS	2	561813	561812
C 132	ENGINE CPT-A/C LO PRESS SW	PED WP	2	561566	561690
C 133	ENGINE CPT-A/C HI PRESS SW	PED WP	2	561566	561690
C 134	FR JCT BOX-LUGGAGE DIODE CON.	AMP MNL	15	561987	561986
C 135	FR JCT BOX-LUGGAGE DIODE CON.	AMP MNL	15	561987	561986
C 137	RR JCT BOX-TRANSMITTER	AMP MNL	2	560900	560898
C 138	RR JCT BOX-CONTROL MODULE	AMP HDP	15	------	562012
C 139	RR JCT BOX-LOGIC MODULE	AMP HDP	15	562011	------
C 142	LAVATORY DOOR WALL	AMP MNL	2	561248	561247
C 143	LAVATORY DOOR WALL	AMP MNL	3	560908	562006
C 144	UNDER LH SEAT-AISLE LTS	AMP MNL	4	560851	560852
C 145	RR JCT BOX CPT-RR SIDE LTS	AMP MNL	9	561670	561669
C 146	ENGINE CPT-MODULATOR VALVE	AMPHENOL	2	------	560412
C 147	BATT & RR J.B.CPT-DOCK.LTS	PED WP	2	561566	561690
C 149	CONDENSER CPT-FAN MOTOR	ORDNANCE	3	562555	562001
C 151	EVAPORATOR CPT-THERMOSTAT	ITT SS	2	561813	562159
C 152	CONDENSER CPT-FUEL GAUGE	PED WP	4	561610	561611
C 153	EVAPORATOR CPT-AIR AMB. SENS	AMP MNL	2	561248	561247
C 154	EVAPORATOR CPT-FRESH AIR SENS	ITT SS	2	561813	561812
C 155	EVAPORATOR CPT-WATER VALVE	PED WP	4	561610	561611
C 156	EVAPOR. CPT-BYPASS WATER VAL.	PED WP	2	561566	561690
C 157	EVAPORATOR CPT-WATER PUMP	PED WP	2	561566	561690
C 158	CONDENSER CPT-A/C LO TEMP.	PED WP	2	561566	561690
C 159	CONDENSER CPT-A/C HI TEMP.	PED WP	2	561566	561690
C 160	FR AXLE-ABS RH SENSOR	WABCO	2	641132	------
C 161	FR AXLE-ABS RH VALVE	WABCO	3	------	641098
C 162	FR AXLE-ABS LH VALVE	WABCO	3	------	641098

CONNECTORS CODE

NO	LOCATION	TYPE	CAVITY	#PIN HOUSING	#SOCKET HOUSING
C 163	FR AXLE-ABS LH SENSOR	WABCO	2	641132	------
C 164	RR AXLE-ABS LH SENSOR	DEUTSCH	2	562486	562485
C 165	RR AXLE-ABS LH VALVE	WABCO	3	------	641098
C 166	RR AXLE-ABS RH VALVE	WABCO	3	------	641098
C 167	RR AXLE-ABS RH SENSOR	DEUTSCH	2	562486	562485
C 168	RR AXLE-ABS OPT ATC	PED WP	4	561610	561611
C 169	RR JCT BOX-SPEED SW	AMP HDP	15	------	562012
C 170	FR JCT BOX-FLASHER UNIT	TC	2	------	561940
C 171	LH CONSOLE	AMP CPC	37	561645	561646
C 172	ENGINE COMPT-WATER TANK HEAT.	PED WP	2	561566	561690
C 173	LAV.POTABLE-WATER TANK HEAT.	AMP MNL	2	560900	560898
C 174	UNDER DASH RH-HTR MODULE	AMP MNL	9	561670	561669
C 175	UNDER DASH RH-HTR MODULE	AMP MNL	9	561670	561669
C 176	UNDER DASH RH-WIPER PULSE	AMP FF	6	------	561186
C 177	UNDER DASH RH-WIPER MOTOR	AMP FF	6	------	561186
C 178	UNDER DASH RH-LH FAN	TC	2	561030	560997
C 179	UNDER DASH RH-RH FAN	TC	2	561030	560997
C 181	RR JCT BOX-DIODE CONNECTOR	AMP MNL	15	561987	561986
C 182	RR JCT BOX COMPT.-WT VIW	AMP CPC	16	561639	561640
C 183	FR SERVICE CPT-KNEELING PAN.	PED WP	4	561610	561611
C 184	FR SERVICE CPT-KNEELING SW	ITT SS	3	561111	561080
C 185	RR JCT BOX COMPT.-WT VIM	PED	30	------	561600
C 186	RR JCT BOX CPT.-SPEED SIGN.TR	PED WP	2	561566	561690
C 186M	RR JCT BOX CPT.-SPD SIGN. M.TR	PED WP	2	561566	561690
C 186W	RR JCT BOX CPT.-SPD SIGN. WT	PED WP	2	561566	561690
C 187	FR JCT BOX-RPM RESISTOR CON.	AMP MNL	6	561552	561515
C 189	ENGINE CPT RR DOOR B/U LT	PED WP	2	561566	561690
C 190	ENGINE CPT RR DOOR TAIL LT	PED WP	2	561566	561690
C 191	ENGINE CPT RR DOOR RH STOP LT	PED WP	2	561566	561690
C 192	ENGINE CPT RR DOOR RH DIR. LT	PED WP	2	561566	561690
C 193	FR SECT. LH HAT RACK-FLUOR.	AMP MNL	2	561248	561247
C 194	ENGINE CPT RR DOOR LH DIR. LT	PED WP	2	561566	561690
C 195	ENGINE CPT RR DOOR LH STOP LT	PED WP	2	561566	561690
C 196	ENGINE CPT RR DOOR CYCLOP LT	PED WP	2	561566	561690
C 199	ENGINE CPT RR DOOR LICENCE LT	DOM AUTO	2	930210	------
C 200	RH HAT RACK-FLUORESCENT	AMP MNL	4	561551	561668
C 201	RH HAT RACK-FLUORESCENT	AMP MNL	4	561551	561668
C 202	RH HAT RACK-BALLAST	AMP MNL	4	560851	560852
C 203	RH HAT RACK-BALLAST	AMP MNL	6	561552	561515
C 204	RH HAT RACK-GENERAL LT	AMP MNL	3	561667	561550
C 205	FR SECT.-RH HAT RACK SPEAKER	AMP MNL	9	561661	561662
C 206	RH HAT RACK-READING LT	AMP MNL	2	560900	560898
C 207	LH HAT RACK-READING LT	AMP MNL	2	560900	560898
C 208	LH HAT RACK-BALLAST	AMP MNL	4	560851	560852
C 210	FR SECT.-LH HAT RACK SPEAKER	AMP MNL	9	561661	561662
C 211	FR ROOF-STORE LH	AMP MNL	2	560900	560898
C 212	FR ROOF-STORE RH	AMP MNL	2	560900	560898
C 213	FR ROOF-CLEARANCE LT	AMP MNL	2	560900	560898
C 220	RR.JCT.BOX-FUEL PRIME PUMP	TC	1	561070	561073
C 225	FR SECT. RH HAT RACK-FLUOR.	AMP MNL	2	561248	561247
C 230	ENG.CPT.-FUEL PRIME PUMP FEED	DEUTSCH	2	562486	562485
C 231	ENG.CPT.-FUEL PRIME PUMP SW.	PED WP	2	561566	561690
C 232	ENG.CPT.-FUEL PRIME PUMP	PED WP	2	561566	561690
C 233	INSTRUMENT PANEL CENTER	V.D.O.	8	------	562043
C 234	INSTRUMENT PANEL CENTER	V.D.O.	4	------	562044
C 235	INSTRUMENT PANEL CENTER	V.D.O.	8	------	562041
C 236	INSTRUMENT PANEL CENTER	AMP MNL	4	560851	560852
C 237	UNDER DASH LH-JACOB CLUTCH SW	ITT SS	3	561111	561080
C 238	RR JCT BOX-DIODE CONNECTOR	AMP MNL	9	561670	561669
C 239	FR SERVICE CPT-HI BUOY VALVE	PED WP	2	561566	561690
C 240	FR SERVICE CPT-KNEEL PROX SW	PED WP	2	561566	561690
C 242	FR SERVICE CPT-MARK & DIR LT	ITT SS	3	561111	561080
C 243	FR SERVICE CPT-HEADLAMPS	TC	3	------	561071
C 244	FR SERVICE CPT-LH FOG LAMP	ITT SS	2	561813	561812
C 245	FR SERVICE CPT-RH FOG LAMP	ITT SS	2	561813	561812
C 246	FR SERVICE CPT-MARK & DIR LT	ITT SS	3	561111	561080
C 248	FR JCT BOX-WIPER PULSE GEN	AMP FF	6	------	561108
C 251	LH SW PANEL-FAST IDLE	SWF	8	------	561107
C 252	LH SW PANEL-SWITCH LT	SWF	2	------	561837
C 253	LH SW PANEL-ETHER	SWF	8	------	561107
C 254	INST. PANEL RH-ENTR.DOOR SW.	TORRIX	5	------	562110
C 255	LH SW PANEL-JACOB	SWF	8	------	561107
C 257	INSTRUMENT PANEL CENT-TACHO	AMP FF	8	------	562363
C 258	LH SW PANEL-MULTI FUNC. SW	AMP FF	8	561188	------
C 259	LH SW PANEL-MULTI FUNC. SW	AMP FF	6	------	561108
C 260	FR SERVICE CPT-LUG DOOR LCK	PED WP	6	561606	561607
C 261	UNDER DASH RH-DOOR MODULE	AMP MNL	9	561670	561669
C 262	UNDER DASH RH-DOOR MODULE	AMP MNL	4	561551	561668
C 263	UNDER DASH RH-DOOR MODULE	AMP MNL	3	561667	561550
C 264	UNDER DASH RH-DOOR MODULE	AMP MNL	3	561667	561550
C 265	UNDER DASH RH-DOOR MODULE	AMP HDP-20	15	562011	562012
C 267	UNDER DASH RH	AMP CPC	24	561642	561643
C 268	UNDER DASH LH-MIRROR	AMP MNL	6	561552	561515
C 269	UNDER DASH RH-MIRROR	AMP MNL	6	561552	561515
C 270	LH MIRROR POST	MOLEX	6	562070	562069
C 271	RH MIRROR POST	MOLEX	6	562070	562069
C 272	LH MIRROR	SPARTAN	6	------	990158
C 273	RH MIRROR	SPARTAN	6	------	990158
C 275	UNDER DASH RH-DOOR MODULE	AMP MNL	9	561670	561669
C 276	UNDER DASH RH-LOCK SOL.VALVE	AMP MNL	2	561248	561247
C 279	UNDER DASH CYLINDER READ SW.	AMP MNL	2	561248	561247
C 280	LH CONSOLE-UNLOAD TAG SW.	SWF	8	------	561107
C 286	RH SW PANEL-A/C & HEAT	SWF	8	------	561107
C 287	ENGINE COMPT-LTS SW	PED WP	2	561566	561690
C 288	RH SW PANEL-FRESH AIR	SWF	8	------	561107
C 289	RH SW PANEL-SWITCH LT	SWF	2	------	561837
C 297	INSTRUMENT PANEL RH -LTS	AMP MNL	2	560900	560898
C 299	LH CONSOLE SW-GALLEY	SWF	8	------	561107
C 301	INSTRUMENT PANEL CENT-TACHO	AMP FF	8	------	562363
C 308	LH CONSOLE SW-RHEOSTAT	TC	2	561030	560997
C 309	DDEC ENGINE-ECM POWER CON.	PED MP	5	------	562345
C 310	LH CONSOLE SW-LUG. DOOR LCK	SWF	8	------	561107
C 311	LH CONSOLE SW-HOS & PAS CHIME	SWF	8	------	561107
C 312	LH CONSOLE SW-READING LTS	SWF	8	------	561107
C 313	LH CONSOLE SW-GEN & FLUOR LTS	SWF	8	------	561107
C 314	LH CONSOLE SW-FR DEST. SIGN	SWF	8	------	561107
C 315	LH CONSOLE SW-LH STORE	SWF	8	------	561107
C 316	LH CONSOLE SPARE SWITCH	SWF	8	------	561107
C 317	LH CONSOLE SW-RH STORE	SWF	8	------	561107
C 318	LH CONSOLE SW-DRV WINDOW LIFT	SWF	8	------	561107
C 320	LH CONSOLE SW-DRIVER'S LTS	SWF	8	------	561107
C 322	LH CONSOLE DRV WIND LIFT MOT	PED PO	2	------	561848
C 323	LH CONSOLE CRUISE CTR SW PAN. AMP	CPC	9	561636	561637
C 325	LH CONSOLE SW-KNEELING	SWF	8	------	561107
C 326	LH CONSOLE SW-SPARE	SWF	8	------	561107
C 327	ENGINE CONTROL	DEUTSCH	6	562583	562581
C 328	GALLEY-LAMP	AMP MNL	2	561248	561247
C 329	ENGINE TACHO SIGNAL	PED WP	3	561781	561789
C 330	GALLEY MICROWAVE SW LT	SWF	2	------	561837
C 331	GALLEY MICROWAVE SW	SWF	8	------	561107
C 332	GALLEY RH CONTAINER SW LT	SWF	2	------	561837
C 333	GALLEY RH CONTAINER SW	SWF	8	------	561107
C 334	GALLEY LH CONTAINER SW	SWF	8	------	561107
C 335	GALLEY LH CONTAINER SW LT	SWF	2	------	561837
C 337	INSTR PANEL LH-UP WIPER SW	SWF	8	------	561107
C 338	INSTR PANEL LH-UP DEFROST SW	SWF	8	------	561107
C 339	INSTR PANEL LH-UP WASHER SW	SWF	8	------	561107
C 340	FR JCT. BOX FIRE PIEZO ALARM	AMP MNL	2	560900	560898
C 341	INSTR PANEL LH-HEAT MIRROR SW	SWF	8	------	561107
C 342	ENGINE RR START SW	DEUTSCH	2	562586	562585

CONNECTORS CODE

NO	LOCATION	TYPE	CAVITY	#PIN HOUSING	#SOCKET HOUSING
C 343	INSTR PANEL LH-HEADLAMP SW	SWF	8	------	561107
C 344	INSTR PANEL LH-HAZARD LT SW	SWF	8	------	561107
C 345	INSTR PANEL LH-FOG LT SW	SWF	8	------	561107
C 346	INSTR PANEL LH-SWITCH LTS	SWF	2	------	561837
C 347	INSTR PANEL LH-DASH LT SW	AMP MNL	2	560900	560898
C 348	INSTR PANEL CENT-RACOR MODULE	MOLEX	6	562070	562067
C 350	RH CONSOLE-THERMOMETER	AMP MNL	3	561667	561550
C 351	LH HAT RACK-FLUOR 110V	MOLEX	4	561477	561476
C 352	RH CONSOLE-DRV TEMP SENSOR	BURNDY	4	------	561104
C 353	INSTR PANEL RH-DRV FAN RHEOST	AMP MNL	6	561552	561515
C 354	INSTR PANEL RH-DRV TEMP CTR	AMP MNL	6	561552	561515
C 355	INSTR PANEL RH-FR TEMP CTR	AMP MNL	3	561667	561550
C 357	INSTR PANEL RH-WATER TEMP GA	AMP MNL	3	561667	561550
C 358	INSTR PANEL RH-FUEL LEVEL GA	AMP MNL	3	561667	561550
C 361	FR ROOF-WIPER MOTOR	AMP FF	6	------	561186
C 362	FR ROOF-LAVATORY OCCUPIED LT	AMP MNL	2	561248	561247
C 363	FR ROOF-WATCH YOUR STEP LT	AMP MNL	2	561248	561247
C 364	FR ROOF-DESTINATION SIGN	AMP MNL	3	561667	561550
C 365	FR ROOF-UP WINDSHIELD DEFROST	AMP MNL	3	561667	561550
C 366	RH DASH PANEL-GRN & RED LEDS	AMP MNL	3	560908	562006
C 367	ENGINE COMPT-DIF OIL T SENSOR	PED WP	2	561566	561690
C 368	FR ROOF-DEST. SIGN BALLAST	AMP MNL	3	561667	561550
C 369	FR ROOF-DEST. SIGN OPER. SW	TORRIX	5	------	562110
C 370	FR ROOF-DEST. SIGN FLUOR.	AMP MNL	2	560900	560898
C 371	FR ROOF-DEST. SIGN FLUOR.	AMP MNL	2	560900	560898
C 372	FR ROOF-DEST. SIGN SPEED SW	MOLEX	4	561477	561476
C 373	FR ROOF-NO SMOKING LT	AMP MNL	2	561248	561247
C 374	LH SWITCH PANEL	AMP MNL	6	561552	561515
C 376	LH SWITCH PANEL	AMP CPC	37	561714	562005
C 377	LH SW PANEL-STOP ENG.OVERIDE	SWF	8	------	561107
C 380	LH CONSOLE-DDR CONNECTOR	DEUTSCH	6	562360	------
C 386	LH CONSOLE-WCL POWER SYSTEM	SWF	8	------	561107
C 387	RR JCT BOX (WCL)	AMP MNL	9	561661	561662
C 388	RR JCT BOX (WCL)	AMP MNL	12	561735	561734
C 389	WCL REAR DOOR	MOLEX	4	561477	561476
C 390	LAVATORY WALL-WCL REMOTE CTR	SWF	8	------	561107
C 391	LAVATORY WALL-WCL LAMP	SWF	8	------	561107
C 392	LAVATORY WALL-WCL SW. LT.	SWF	2	------	561835
C 393	LAVATORY WALL-WCL REMOTE SYS.	AMP CPC	4	561686	561687
C 394	UNDER INSTR. PANEL- B/U MONITOR	AMP MNL	4	560851	560852
C 395	DRIVER'S COMPT. - B/U MONITOR	AMP	5	------	------
C 396	FR SECT. LH HAT RACK-SPEAKER	MOLEX	4	562507	562503
C 397	ENGINE COMPT. CRADLE ACC.	DEUTSCH	40	562281	562284
C 400	ENGINE COMPT. BLOCK HEATER	PED MP	3	561781	561782
C 402	RR DRIVE AXLE-AIR DRYER	PED MP	2	------	562251
C 403	GALLEY FRIGO NORCOLD	AMP MNL	2	561248	561247
C 404	GALLEY LAMP	AMP MNL	2	561248	561247
C 406	FR JCT BOX COMPT.-ABS	AMP MNL	2	560900	560898
C 407	ENGINE COMPT. -SIGNAL	PED WP	6	561606	561607
C 408	ENGINE COMPT. -SIGNAL	PED WP	6	561606	561607
C 409	ENGINE CPT -LOW COOL. LEVEL	PED MP	2	------	562350
C 410	FR JCT BOX-DIODE CONNECTOR	AMP MNL	15	561987	561986
C 411	FR JCT BOX-DIODE CONNECTOR	AMP MNL	15	561987	561986
C 412	LH SW PANEL-MASTER SWITCH	SWF	8	------	561107
C 413	ENG CPT-A/C HI UNLOAD PRS SW	PED WP	2	561566	561690
C 414	RR JCT BOX	AMP MNL	9	561670	561669
C 415	ENGINE CRADLE-FAN SIGNAL	PED WP	3	561781	561782
C 416	ENGINE CRADLE-FAN SIGNAL	PED P-C	3	562237	------
C 417	FRONT JCT BOX-DIODES	AMP MNL	15	561987	561986
C 418	INSTR. PANEL LH-HTR WINDSH.SW	SWF	8	------	561107
C 419	FR JCT BOX-RETARDER OR JACOB	AMP MNL	3	561667	561550
C 420	ENGINE COMPT. WEBASTO WATER HTR	TC	2	561597	------
C 421	ENGINE COMPT. WEBASTO WATER HTR	TC	1	561073	------
C 422	ENGINE COMPT. WEBASTO WATER HTR	TC	2	561597	------
C 424	UNDER INSTRUMENT PANEL CENTER	AMP MNL	3	561667	561550

NO	LOCATION	TYPE	CAVITY	#PIN HOUSING	#SOCKET HOUSING
C 425	FR JCT BOX-DIODES	AMP MNL	15	561987	561986
C 426	ENGINE COMPT. CLUTCH CTR FAN	PED WP	3	561781	561782
C 429	FR JCT BOX COMPT.	AMP MNL	6	561552	561515
C 430	LH CONSOLE-TIMER	AMP FF	8	561188	562363
C 431	LH CONSOLE-PRE HEAT.	TAB AMP	1	561540	561539
C 432	ENGINE CPT.-PROX. SW. DOOR AJAR	DEUTSCH	4	562479	562477
C 433	FR SERVICE CPT. KNEEL. PRESS. SW	PED WP	2	561566	561690
C 434	FRONT JCT. BOX-DIODES	AMP MNL	15	561987	561986
C 435	FR SERVICE CPT.(RH) KNEEL. PIEZO	AMP MNL	2	560900	560898
C 436	RH HAT RACK-WCL CENTER ROOF ACC	AMP CPC	16	561639	561640
C 437	RH HAT RACK-WCL FR & RR SECT.	AMP CPC	24	561642	561643
C 450	SOUND SYS. JCT. PANEL	MOLEX	4	562507	562503
C 451	WIRELESS MICRO-FIRST CPT BAG	MOLEX	2	562550	562549
C 452	UNDER DASH INSTR. PANEL	MOLEX	2	562550	562549
C 453	SOUND SYS. JCT.PANEL-VCP	PED WP	2	561566	561680
C 454	SOUND SYS.JCT.PAN.-FILT. VCP	PED WP	2	561566	561680
C 455	WIRELESS MICRO-LH HAT-RACK	CINCH	2	562554	562551
C 456	WORLD TRANSM.-RETARDER ACCUM.	PED MP	2	------	562427
C 457	WORLD TRANSM.-MAIN CONNECTOR	DEUTSCH	31	562572	562536
C 458	WORLD TRANSM.-TURBINE SP.SENS	PED MP	2	------	562426
C 459	WORLD TRANSM.-ENGINE SP.SENS.	PED MP	2	------	562426
C 460	WORLD TRANSM.-SPEED SENSOR	ITT	2	------	562541
C 461	WORLD TRANSM.-RETARDER TEMP.	PED MP	2	561566	561680
C 462	WORLD TRANSM.-RETARD SOL."K"	PED MP	2	------	562426
C 463	WORLD TRANSM.-SENSOR CONN.	DEUTSCH	16	562570	562571
C 464	RR JCT BOX-DDL CONN W.T.	PED MP	12	------	562574
C 465	LH CONSOLE-SHIFTER SELECTOR	T & BET	10	------	562429
C 466	FR SERVICE CPT.-RESIS. MOD.	PED WP	3	------	562428
C 467	FR SERVICE CPT.-RESIS. MOD.	PED WP	3	------	562428
C 468	RR JCT BOX-VIM MOD. W.T.	PED MP	18	------	562573
C 470	FR LH UPPER WHELL CPT-SILENT 1000	AMP MNL	2	561248	561247
C 471	FR LH UPPER WHELL CPT-SILENT 1000	AMP MNL	2	561248	561247
C 472	FR LH UPPER WHELL CPT-SILENT 1000	PED WP	2	561566	561690
C 473	FR LH UPPER WHELL CPT-SILENT 1000	AMP MNL	3	561667	561550
C 474	LUGGAGE CPT.-TEMP. SENSOR	AMP MNL	2	561247	561248
C 475	RR JCT BOX-SPEED SIGN CONNECTOR	AMP MNL	2	561248	561247
C 475M	RR JCT BOX-SPEED SIGN MANUAL TR.	MOLEX	6	562070	562069
C 475W	RR JCT BOX-SPEED SIGN WORLD TR.	MOLEX	6	562070	562069
C 476	RR JCT BOX-VIM WORLD TRANSM.	AMP CPC	16	561639	561640
C 477	RR JCT BOX-WORLD TR. SHIFT.&RET.	AMP CPC	9	561636	561637
C 478	ELECTRONIC DESTINATION SIGN	AMP CPC	9	561636	561637
C 483	FR SERVICE CPT. (NOT USED)	PED PC	2	------	562237
C 500	FR LH UPPER WHELL CPT -PRODRIVER	MOLEX	6	562070	562069
C 501	FR LH UPPER WHELL CPT -PRODRIVER MOD	PED MP	7	562433	------
C 502	LH CONSOLE-PRE HEATER SW.	SWF	8	------	561107
C 503	LH CONSOLE-PRE HEATER SW.	SWF	2	------	561837
C 504	LH CONSOLE WEBASTO TIMER	AMP	8	561188	562363
C 505	LH CONSOLE ESPAR TIMER	AMP	12	------	562681
C 506	FR JCT BOX CPT. DIGITAL CLOCK	AMP	4	561685	561687
C 507	FR SECT. LH HAT-RACK DIG. CLOCK	MOLEX	4	561477	561476
C 508	RR JCT BOX-FAN CLUTCH RETARDER	AMP MNL	6	561552	561515
C 509	FR LH UPPER WHELL CPT -DATA LOGGER	PED MP	16	------	562530
C 510	FR LH UPPER WHELL CPT -DATA LOGGER	DEUTSCH	9	562531	------
C 511	FR LH UPPER WHELL CPT -DATA LOGGER	PED MP	4	562532	------
C 512	FR LH UPPER WHELL CPT -DATA LOGGER	PED MP	10	562533	------
C 513	FR LH UPPER WHELL CPT -DATA LOGGER	AMP MNL	3	561667	561550
C 514	FR LH UPPER WHELL CPT -DATA LOGGER	PED MP	6	562433	562417
C 515	RH DASH PANEL-T.T.LT.	AMP CPC	14	561585	561583
C 515	FR JCT BOX CPT.-INTERCOM	MOLEX	4	561477	561476
C 516	CENTER DASH PANEL -UPPER T.T.LT.	AMP CPC	24	561642	561643
C 516	FR JCT BOX CPT.-INTERCOM	MOLEX	6	562070	562069
C 517	CENTER DASH PANEL -LOWER T.T.LT.	AMP CPC	24	561642	561643
C 517	LAVATORY WALL-INTERCOM	MOLEX	6	562070	562069
C 519	UNDER DASH RH-SEDAN DOOR	HUMPHREY	2	------	562580
C 520	UNDER DASH RH-SEDAN DOOR	HUMPHREY	2	------	641385

CONNECTORS CODE

NO	LOCATION	TYPE	CAVITY	#PIN HOUSING	#SOCKET HOUSING
C 521	UNDER DASH RH-SEDAN DOOR	HUMPHREY	2	------	641385
C 522	FR JCT BOX-DAYTIME LTS MODULE	BOSCH	5	------	561183
C 523	FR JCT BOX-FUSE BLOCK	PED	8	562647	562646
C 524	FR JCT BOX-FUSE BLOCK	PED	8	562647	562646
C 525	FR JCT BOX-FUSE BLOCK	PED	8	562647	562646
C 526	FR JCT BOX-FUSE BLOCK	PED	8	562647	562646
C 527	FR JCT BOX-FUSE BLOCK	PED	8	562647	562646
C 528	FR JCT BOX-FUSE BLOCK	PED	8	562647	562646
C 529	FR JCT BOX-12V OUTLET	AMP MNL	2	561247	561248
C 530	RR JCT BOX-FUSE BLOCK	PED	8	562647	562646
C 531	RR JCT BOX-FUSE BLOCK	PED	8	562647	562646
C 532	RR JCT BOX-FUSE BLOCK	PED	8	562647	562646
C 533	RR JCT BOX-FUSE BLOCK	PED	8	562647	562646
C 534	RR JCT BOX-FUSE BLOCK	PED	8	562647	562646
C 535	RR JCT BOX-FIRE MODULE DETECT.	AMP MNL	3	561667	561550
C 536	UNDER DASH RH-DRIVER'S HTR TEMP. CTR	AMP MNL	6	561552	561515
C 537	BATT. CPT.-A/C PRESS. SIGN. RLY	AMP MNL	2	561248	561247
C 538	FR SERVICE CPT.-OUTSIDE TEMP. SENSOR	AMP MNL	2	561248	561247
C 539	RH DASH PANEL-THERMOMETER SOUND	AMP MNL	2	561248	561247
C 540	RH DASH PANEL-THERMOMETER SOUND	AMP MNL	2	561248	561247
C 541	SOUND SYS. JCT PANEL-AUDIO SEAT SYS.	PED WP	2	561566	561690
C 542	LH HAT RACK-AUDIO SEAT SYSTEM	AMP MNL	3	561667	561550
C 543	RR JCT BOX-PARK. BRAKE STOP LTS RESIS.	PED WP	2	561566	561690
C 544	SOUND SYS JCT PANEL-AUDIO SEAT SYS.	PED WP	3	561781	562428
C 545	LH HAT RACK-AUDIO SEAT SYSTEM	AMP MNL	3	561667	561550
C 546	LH DASH PANEL-ACCESSORIES	AMP CPC	37	561645	561646
C 547	RH DASH PANEL-ACCESSORIES	AMP CPC	37	561645	561646
C 548	LH DASH PANEL-T.T. LT. TEST SW.	SWF	8	------	561107
C 549	LH CONSOLE-FAN CLUTCH OVERRIDE SW.	SWF	8	------	561107
C 550	EVAPORATOR COMPARTIMENT	ITT	2	561813	562159
C 551	RR JCT BOX - A/C PANEL	PED	2	561566	561690

NO	LOCATION	TYPE	CAVITY	#PIN HOUSING	#SOCKET HOUSING

DIODES NUMBER CODE

No.	PAGE	AMP	#PREV.	LOCATION	FUNCTION
D1	7	3A	561740	FR JCT BOX	LO-AIR SONALERT-PRIMARY
D2	7	3A	561740	FR JCT BOX	LO-AIR SONALERT-SECONDARY
D4	9.2	3A	561740	FR JCT BOX	WARNING HAZARD-RH
D5	9.2	3A	561740	FR JCT BOX	WARNING HAZARD-LH
D6	5	3A	561740	FR JCT BOX	WCL NEUT. SIGN INTERFACE TO PARK BRK TTLT
D9	12	3A	561740	FR L.H. HAT-RACK	HOSTESS & PASSENGER CHIME
D11	17	3A	561740	RR JCT BOX	LAVATORY OCCUPIED SIGN
D12	17	3A	561740	RR JCT BOX	LAVATORY OCCUPIED SIGN
D13	17	3A	561740	FR DEST. SIGN	FR DESTINATION SIGN
D14	17	3A	561740	FR DEST. SIGN	FR DESTINATION SIGN
D15	18	3A	561740	FR JCT BOX	KNEELING SYSTEM CTR-UP
D16	18	3A	561740	FR JCT BOX	KNEELING SYSTEM CTR-DOWN
D17	9.2	3A	561740	FR JCT BOX	WARNING HAZARD-LH
D18	9.2	3A	561740	FR JCT BOX	WARNING HAZARD-RH
D19	9	3A	561740	FR JCT BOX	DAYTIME RUN LTS-PARK BRK CALL SW.
D20	9	3A	561740	FR JCT BOX	DAYTIME RUN LTS-HEAD LT SW
D21	18	3A	561740	FR JCT BOX	KNEELING SYSTEM FEED BACK
D25	11.1	3A	561740	FR JCT BOX	LUGGAGE DOOR AJAR T.T.LT.
D26	11.1	3A	561740	FR JCT BOX	LUGGAGE DOOR AJAR T.T.LT.
D27	11.1	3A	561740	FR JCT BOX	LUGGAGE DOOR AJAR T.T.LT.
D28	11.1	3A	561740	FR JCT BOX	LUGGAGE DOOR AJAR T.T.LT.
D29	11.1	3A	561740	FR JCT BOX	LUGGAGE DOOR AJAR T.T.LT.
D30	11.1	3A	561740	FR JCT BOX	LUGGAGE DOOR AJAR T.T.LT.
D32	11.3	3A	561740	FRONT ROOF CABL.	DRIVER'S LTS FEED BY STEP LTS
D33	11.3	3A	561740	FRONT ROOF CABL.	DRIVER'S LTS FEED BY STEP LTS
D35	25	3A	561740	RR JCT BOX	WCL DOOR AJAR ALARM T.T.LT.
D58	17	3A	561740	FR JCT BOX	RR HIGH BUOY - KNEELING
D59	13.1	3A	561740	RJB A/C JCT PANEL	A/C & HEAT BYPASS SWITCH
D60	13.1	3A	561740	RJB A/C JCT PANEL	A/C COMPR.CLUTCH SUPPRESSOR
D61	9.2	3A	561740	FR JCT BOX	KNEELING SIDE FR RH DIRECTIONNAL LT
D62	13.1	3A	561740	RJB A/C JCT PANEL	WATER PUMP FEED
D63	17	3A	561740	FR JCT BOX	LAVATORY SONALERT
D64	17	3A	561740	FR JCT BOX	WCL DOOR ALARM
D65	13.1	3A	561740	RJB A/C JCT PANEL	WATER PUMP - PRE-HEAT FEED
D66	13.1	3A	561740	RJB A/C JCT PANEL	WATER VALVE - HEAT SW. FEED
D67	9.2	3A	561740	UNDER DASH	AUDIBLE FLASHER RLY - RH
D68	9.2	3A	561740	UNDER DASH	AUDIBLE FLASHER RLY - LH
D70	18	3A	561740	FR JCT BOX	FR HIGH BUOY - KNEELING
D71	18	3A	561740	FR JCT BOX	FR HIGH BUOY - KNEELING
D72	18	3A	561740	FR JCT BOX	FR HIGH BUOY - KNEELING
D73	18	3A	561740	FR JCT BOX	FR HIGH BUOY - KNEELING
D74	1	3A	561740	FR JCT BOX	DASH MASTER CUT OUT SW.
D75	4	3A	381351	BAT CPT	STARTER-SUPPRESSOR COIL RLY
D77	18	3A	561740	FR JCT BOX	PARKING BRAKE - KNEELING
D78	26	3A	561740	LH CONSOLE	PRE-HEAT WATER HEATER SW.
D79	26	3A	561740	LH CONSOLE	PRE-HEAT WATER HEATER SW.
D81	18	3A	561740	FR JCT BOX	PIEZO-KNEELING
D82	18	3A	561740	FR JCT BOX	PIEZO-KNEELING
D83	8	3A	561740	RR JCT BOX	FAN CLUTCH W/RETARDER
D84	13.1	3A	561740	RJB A/C JCT PANEL	WATER VALVE
D85	13.1	3A	561740	RJB A/C JCT PANEL	WATER PUMP
D86	16	3A	561740	UNDER DASH RH	ENTRANCE DOOR SEDAN
D87	16	3A	561740	UNDER DASH RH	ENTRANCE DOOR SEDAN
D88	16	3A	561740	UNDER DASH RH	ENTRANCE DOOR SEDAN
D89	16	3A	561740	UNDER DASH RH	ENTRANCE DOOR SEDAN
D90	16	3A	561740	UNDER DASH RH	ENTRANCE DOOR SEDAN
D91	16	3A	561740	UNDER DASH RH	ENTRANCE DOOR SEDAN

DIODES NUMBER CODE

No.	PAGE	AMP	#PREV.	LOCATION	FUNCTION
D 1	7	3A	561740	FR JCT BOX	LO-AIR SONALERT-PRIMARY
D 2	7	3A	561740	FR JCT BOX	LO-AIR SONALERT-SECONDARY
D 4	9.2	3A	561740	FR JCT BOX	WARNING HAZARD-RH
D 5	9.2	3A	561740	FR JCT BOX	WARNING HAZARD-LH
D 6	5	3A	561740	FR JCT BOX	WCL NEUT. SIGN INTERFACE TO PARK BRK TTLT
D 9	12	3A	561740	FR L.H. HAT-RACK	HOSTESS & PASSENGER CHIME
D 11	17	3A	561740	RR JCT BOX	LAVATORY OCCUPIED SIGN
D 12	17	3A	561740	RR JCT BOX	LAVATORY OCCUPIED SIGN
D 13	17	3A	561740	FR DEST. SIGN	FR DESTINATION SIGN
D 14	17	3A	561740	FR DEST. SIGN	FR DESTINATION SIGN
D 15	18	3A	561740	FR JCT BOX	KNEELING SYSTEM CTR-UP
D 16	18	3A	561740	FR JCT BOX	KNEELING SYSTEM CTR-DOWN
D 17	9.2	3A	561740	FR JCT BOX	WARNING HAZARD-LH
D 18	9.2	3A	561740	FR JCT BOX	WARNING HAZARD-RH
D 19	9	3A	561740	FR JCT BOX	DAYTIME RUN LTS-PARK BRK CALL SW.
D 20	9	3A	561740	FR JCT BOX	DAYTIME RUN LTS-HEAD LT SW
D 21	18	3A	561740	FR JCT BOX	KNEELING SYSTEM FEED BACK
D 25	11.1	3A	561740	FR JCT BOX	LUGGAGE DOOR AJAR T.T.LT.
D 26	11.1	3A	561740	FR JCT BOX	LUGGAGE DOOR AJAR T.T.LT.
D 27	11.1	3A	561740	FR JCT BOX	LUGGAGE DOOR AJAR T.T.LT.
D 28	11.1	3A	561740	FR JCT BOX	LUGGAGE DOOR AJAR T.T.LT.
D 29	11.1	3A	561740	FR JCT BOX	LUGGAGE DOOR AJAR T.T.LT.
D 30	11.1	3A	561740	FR JCT BOX	LUGGAGE DOOR AJAR T.T.LT.
D 32	11.3	3A	561740	FRONT ROOF CABL.	DRIVER'S LTS FEED BY STEP LTS
D 33	11.3	3A	561740	FRONT ROOF CABL.	DRIVER'S LTS FEED BY STEP LTS
D 35	25	3A	561740	RR JCT BOX	WCL DOOR AJAR ALARM T.T.LT.
D 43	10	3A	561740	LOWER WIPER MOT.	WIPER MOTOR SUPRESSOR
D 44	10	3A	561740	LOWER WIPER MOT.	WIPER MOTOR SUPRESSOR
D 45	10	3A	561740	LOWER WIPER MOT.	WIPER MOTOR SUPRESSOR
D 58	17	3A	561740	FR JCT BOX	RR HIGH BUOY - KNEELING
D 59	13.1	3A	561740	RJB A/C JCT PANEL	A/C & HEAT BYPASS SWITCH
D 60	13.1	3A	561740	RJB A/C JCT PANEL	A/C COMPR.CLUTCH SUPPRESSOR
D 61	9.2	3A	561740	FR JCT BOX	KNEELING SIDE FR RH DIRECTIONNAL LT
D 62	13.1	3A	561740	RJB A/C JCT PANEL	WATER PUMP FEED
D 63	17	3A	561740	FR JCT BOX	LAVATORY SONALERT
D 64	17	3A	561740	FR JCT BOX	WCL DOOR ALARM
D 65	13.1	3A	561740	RJB A/C JCT PANEL	WATER PUMP - PRE-HEAT FEED
D 66	13.1	3A	561740	RJB A/C JCT PANEL	WATER VALVE - HEAT SW. FEED
D 67	9.2	3A	561740	UNDER DASH	AUDIBLE FLASHER RLY - RH
D 68	9.2	3A	561740	UNDER DASH	AUDIBLE FLASHER RLY - LH
D 70	18	3A	561740	FR JCT BOX	FR HIGH BUOY - KNEELING
D 71	18	3A	561740	FR JCT BOX	FR HIGH BUOY - KNEELING
D 72	18	3A	561740	FR JCT BOX	FR HIGH BUOY - KNEELING
D 73	18	3A	561740	FR JCT BOX	FR HIGH BUOY - KNEELING
D 74	1	3A	561740	FR JCT BOX	DASH MASTER CUT OUT SW.
D 75	4	3A	381351	BAT CPT	STARTER-SUPPRESSOR COIL RLY
D 77	18	3A	561740	FR JCT BOX	PARKING BRAKE - KNEELING
D 78	26	3A	561740	LH CONSOLE	PRE-HEAT WATER HEATER SW.
D 79	26	3A	561740	LH CONSOLE	PRE-HEAT WATER HEATER SW.
D 81	18	3A	561740	FR JCT BOX	PIEZO-KNEELING
D 82	18	3A	561740	FR JCT BOX	PIEZO-KNEELING
D 83	8	3A	561740	RR JCT BOX	FAN CLUTCH W/RETARDER
D 84	13.1	3A	561740	RJB A/C JCT PANEL	WATER VALVE
D 85	13.1	3A	561740	RJB A/C JCT PANEL	WATER PUMP
D 86	16	3A	561740	UNDER DASH RH	ENTRANCE DOOR SEDAN
D 87	16	3A	561740	UNDER DASH RH	ENTRANCE DOOR SEDAN
D 88	16	3A	561740	UNDER DASH RH	ENTRANCE DOOR SEDAN
D 89	16	3A	561740	UNDER DASH RH	ENTRANCE DOOR SEDAN
D 90	16	3A	561740	UNDER DASH RH	ENTRANCE DOOR SEDAN
D 91	16	3A	561740	UNDER DASH RH	ENTRANCE DOOR SEDAN

RELAYS NUMBER CODE

No.	PAGE	COIL V	#PREV.	LOCATION	FUNCTION
R F1	8	24V	561707	RR JCT BOX	FAN CLUTCH W/RET. SPEED 1
R F2	8	24V	561707	RR JCT BOX	FAN CLUTCH W/RET. SPEED 2
R F3	8	24V	560772	RR JCT BOX	TIME DELAY
R LA	16	24V	561707	UNDER DASH RH.	ENTRANCE DOOR SEDAN (LATCH)
R LO	16	24V	561707	UNDER DASH RH.	ENTRANCE DOOR SEDAN (PRESS. SW.)
R LT	16	24V	561707	UNDER DASH RH.	ENTRANCE DOOR SEDAN (LIGHT)
R LV	16	24V	561707	UNDER DASH RH.	ENTRANCE DOOR SEDAN (VALVE)
R 1	1.1	24V	561991	FR JCT BOX	ENGINE RUN (24) FR
R 2	2	24V	561991	BATT. CPT.	ENGINE RUN (12) FR & RR
R 3	4	24V	561707	BATT. CPT.	FIELD RELAY
R 4	4	24V	561005	BATT. CPT.	STARTING MOTOR
R 5	5	24V	561707	FR JCT BOX	CRUISE CTR. STOP SIGN.
R 6	9.3	24V	561707	RR JCT BOX	STOP LTS-PARKING BRAKE
R 7	5	24V	561707	FR JCT BOX	FAST IDLE
R 8	6	24V	561707	RR JCT BOX	12V IGNITION WT
R 9	9.3	24V	561707	RR JCT BOX	BACK-UP LTS
R 11	5	24V	561707	RR JCT BOX	12V IGNITION DDEC3
R 12	7	12V	562092	FR JCT BOX	ELECTRICAL HORNS
R 13	9.3	24V	561707	FR JCT BOX	FOG LTS
R 14	9.1	24V	561707	FR JCT BOX	BLINKER
R 15	9.1	24V	561707	FR JCT BOX	FR MARKER LTS
R 16	9.1	24V	561707	FR JCT BOX	IDENT. & CLEARANCE LTS
R 17	9.1	24V	561707	RR JCT BOX	TAIL,LICENCE,MARKER-RR LTS
R 18	9.1	24V	561707	FR JCT BOX	D R L-PARK BRK CUT-IN
R 19	9.1	24V	561707	FR JCT BOX	HEADLAMPS (HI)
R 20	9.1	24V	561707	FR JCT BOX	HEADLAMPS (LO)
R 21	9.2	24V	561707	FR JCT BOX	L.H. DIRECTIONNAL LT
R 23	9.2	24V	561707	FR JCT BOX	R.H. DIRECTIONNAL LT
R 24	9.2	24V	561707	FR JCT BOX	R.H. CORNERING LT
R 25	9.2	24V	561707	FR JCT BOX	L.H. CORNERING LT
R 26	9.3	24V	561707	RR JCT BOX	STOP LTS
R 27	11.2	24V	561707	RR JCT BOX	AISLE & EMERG.EXIT - LTS
R 28	11.2	24V	561707	FR JCT BOX	DASH LTS RHEOSTAT
R 29	11.3	24V	561707	RR JCT BOX	READING LTS R.H.
R 30	11.3	24V	561707	RR JCT BOX	READING LTS L.H.
R 31	11.3	24V	561707	RR JCT BOX	GENERAL LTS
R 32	11.4	24V	561707	RR JCT BOX	24V FLUORESCENT
R 33	13.1	12V	562092	FR JCT BOX	BLOWER CUT-IN RLY
R 34	13.1	24V	561707	RJB A/C JCT PANEL	A/C LOGIC PANEL
R 35	13.1	24V	561707	RJB A/C JCT PANEL	WATER PUMP
R 36	13.1	24V	561707	RJB A/C JCT PANEL	A/C COMPRESSOR CLUTCH
R 37	10	24V	561707	FR JCT BOX	KNEELING LT
R 39	13.2	24V	561005	BATT. CPT.	CONDENSER FAN MOTOR
R 40	13.2	24V	561014	BATT. CPT.	CONDENSER SPEED CTR HI
R 41	13.2	24V	561005	BATT. CPT.	CONDENSER SPEED CTR HI
R 43	18	24V	561707	FR JCT BOX	KNEELING SYSTEM
R 44	18	24V	561707	FR JCT BOX	KNEELING SYSTEM
R 47	23	24V	561707	GALLEY COMPT	GALLEY-LIQUID CONTAINERS
R 48	23	24V	561707	GALLEY COMPT	COFFEE MAKER
R 49	21	24V	561707	FR JCT BOX	ABS - SERVICE BRK RLY
R 50	21	24V	561707	FR JCT BOX	ABS - VR2 RLY
R 51	21	24V	561707	FR JCT BOX	ABS - WARNING RLY
R 52	21	24V	561707	FR JCT BOX	ABS - VR1 RLY
R 53	1.1	24V	561991	RR JCT BOX	ENGINE RUN (24) RR
R 54	1.1	24V	561991	BATT. CPT.	12V CUT OUT RLY RR
R 55	1.1	24V	561991	BATT. CPT.	12V CUT OUT RLY FR
R 57	9.1	24V	561707	FR JCT BOX	DAY'S BLINKER
R 59	9.3	12V	562092	RR JCT BOX	DOCKING LTS
R 61	9.3	24V	561707	RR JCT BOX	STOP LTS-JACOB & RET. SIGNAL
R 66	20.3	24V	561707	SS JCT PANEL	SOUND SYSTEM VIDEO
R 67	20.1	24V	561707	SS JCT PANEL	SOUND SYSTEM RADIO
R 68	20.1	24V	561991	SS JCT PANEL	SOUND SYSTEM AMPLIFIER
R 78	1.1	12V	562092	FR JCT BOX	MASTER SWITCH
R 79	23	24V	561707	GALLEY CPT.	GALLEY-REFRIGERATOR

No.	PAGE	COIL V	#PREV.	LOCATION	FUNCTION
R 80	11.1	24V	561707	RR JCT BOX	ENGINE COMPARTMENT LTS
R 82	19	24V	561707	FR JCT BOX	RETARDER WT
R 84	8	24V	561707	RR JCT BOX	FAN CLUTCH-FIRST SPEED
R 85	8	24V	561707	RR JCT BOX	FAN CLUTCH-SECOND SPEED
R 87	19	24V	561707	RR JCT BOX	ENGINE BRAKE REQUEST WT
R 89	22	24V	561707	FR JCT BOX	HEATING WINDSHIELD
R 90	22	24V	561707	FR JCT BOX	HEATING WINDSHIELD
R 91	22	24V	561707	FR JCT BOX	HEATING WINDSHIELD
R 92	22	24V	561707	FR JCT BOX	HEATING WINDSHIELD
R 93	26	24V	561707	RR JCT BOX	PRE-HEAT WATER HEATER (WEBASTO)
R 94	25	24V	561707	RR JCT BOX	WCL - SYSTEM
R 95	25	24V	561707	RR JCT BOX	WCL - MAGNETIC SW. SIGN.
R 96	25	24V	561707	RR JCT BOX	WCL - DOOR AJAR ALARM
R 97	25	24V	561707	RR JCT BOX	WCL - DOOR AJAR PARK. BRAKE
R 98	25	12V	561538	RR JCT BOX	WCL -.
R 99	8	24V	561707	RR JCT BOX	RADIATOR FAN CLUTCH
R 100	4	12V	561538	RR JCT BOX	GENERATOR SIGNAL
R 101	13.1	24V	561707	FR JCT BOX	DAMPER GAZ CYLINDER
R 102	13.1	24V	561707	RR JCT BOX	COMPRESSEUR CLUTCH CUT-OUT BELOW 40 F
R 2010	26.2	24V	561230	WEBASTO PRE-HEAT	WEBASTO
V IMN	6	12V	562092	RR JCT BOX	VIM WORLD TR.-NEUTRAL SIGNAL
V IMR	6	12V	562092	RR JCT BOX	VIM WORLD TR.-B/U SIGNAL
V IM1	6	12V	562092	RR JCT BOX	VIM WORLD TR.-OUTPUT 1
V IM2	6	12V	562092	RR JCT BOX	VIM WORLD TR.-OUTPUT 2 ENG. BRK DISABLE
V IM3	6	12V	562092	RR JCT BOX	VIM WORLD TR.-OUTPUT 3 SPD SW. 5MPH NO NC
V IM4	6	12V	562092	RR JCT BOX	VIM WORLD TR.-OUTPUT 4 RETARD. ON SIGNAL

RELAYS NUMBER CODE

No.	PAGE	COIL V	#PREV.	LOCATION	FUNCTION
R F1	8	24V	561707	RR JCT BOX	FAN CLUTCH W/RET. SPEED 1
R F2	8	24V	561707	RR JCT BOX	FAN CLUTCH W/RET. SPEED 2
R F3	8	24V	560772	RR JCT BOX	TIME DELAY
R LA	16	24V	561707	UNDER DASH RH	ENTRANCE DOOR SEDAN (LATCH)
R LO	16	24V	561707	UNDER DASH RH.	ENTRANCE DOOR SEDAN (PRESS. SW.)
R LT	16	24V	561707	UNDER DASH RH.	ENTRANCE DOOR SEDAN (LIGHT)
R LV	16	24V	561707	UNDER DASH RH.	ENTRANCE DOOR SEDAN (VALVE)
R 1	1.1	24V	561991	FR JCT BOX	ENGINE RUN (24) FR
R 2	2	24V	561991	BATT. CPT.	ENGINE RUN (12) FR & RR
R 3	4	24V	561707	BATT. CPT.	FIELD RELAY
R 4	4	24V	561005	BATT. CPT.	STARTING MOTOR
R 5	5	24V	561707	FR JCT BOX	CRUISE CTR. STOP SIGN.
R 6	9.3	24V	561707	RR JCT BOX	STOP LTS-PARKING BRAKE
R 7	5	24V	561707	FR JCT BOX	FAST IDLE
R 8	6	24V	561707	RR JCT BOX	12V IGNITION WT
R 9	9.3	24V	561707	RR JCT BOX	BACK-UP LTS
R 11	5	24V	561707	RR JCT BOX	12V IGNITION DDEC3
R 12	7	12V	562092	FR JCT BOX	ELECTRICAL HORNS
R 13	9.3	24V	561707	FR JCT BOX	FOG LTS
R 14	9.1	24V	561707	FR JCT BOX	BLINKER
R 15	9.1	24V	561707	FR JCT BOX	FR MARKER LTS
R 16	9.1	24V	561707	FR JCT BOX	IDENT. & CLEARANCE LTS
R 17	9.1	24V	561707	RR JCT BOX	TAIL,LICENCE,MARKER-RR LTS
R 18	9.1	24V	561707	FR JCT BOX	D R L-PARK BRK CUT-IN
R 19	9.1	24V	561707	FR JCT BOX	HEADLAMPS (HI)
R 20	9.1	24V	561707	FR JCT BOX	HEADLAMPS (LO)
R 21	9.2	24V	561707	FR JCT BOX	L.H. DIRECTIONNAL LT
R 23	9.2	24V	561707	FR JCT BOX	R.H. DIRECTIONNAL LT
R 24	9.2	24V	561707	FR JCT BOX	R.H. CORNERING LT
R 25	9.2	24V	561707	FR JCT BOX	L.H. CORNERING LT
R 26	9.3	24V	561707	RR JCT BOX	STOP LTS
R 27	11.2	24V	561707	RR JCT BOX	AISLE & EMERG.EXIT - LTS
R 28	11.2	24V	561707	FR JCT BOX	DASH LTS RHEOSTAT
R 29	11.3	24V	561707	RR JCT BOX	READING LTS R.H.
R 30	11.3	24V	561707	RR JCT BOX	READING LTS L.H.
R 31	11.3	24V	561707	RR JCT BOX	GENERAL LTS
R 32	11.4	24V	561707	RR JCT BOX	24V FLUORESCENT
R 33	13.1	12V	562092	FR JCT BOX	BLOWER CUT-IN RLY
R 34	13.1	24V	561707	RJB A/C JCT PANEL	A/C LOGIC PANEL
R 35	13.1	24V	561707	RJB A/C JCT PANEL	WATER PUMP
R 36	13.1	24V	561707	RJB A/C JCT PANEL	A/C COMPRESSOR CLUTCH
R 37	10	24V	561707	FR JCT BOX	KNEELING LT
R 39	13.2	24V	561005	BATT. CPT.	CONDENSER FAN MOTOR
R 40	13.2	24V	561014	BATT. CPT.	CONDENSER SPEED CTR HI
R 41	13.2	24V	561005	BATT. CPT.	CONDENSER SPEED CTR HI
R 43	18	24V	561707	FR JCT BOX	KNEELING SYSTEM
R 44	18	24V	561707	FR JCT BOX	KNEELING SYSTEM
R 47	23	24V	561707	GALLEY COMPT	GALLEY-LIQUID CONTAINERS
R 48	23	24V	561707	GALLEY COMPT	COFFEE MAKER
R 49	21	24V	561707	FR JCT BOX	ABS - SERVICE BRK RLY
R 50	21	24V	561707	FR JCT BOX	ABS - VR2 RLY
R 51	21	24V	561707	FR JCT BOX	ABS - WARNING RLY
R 52	21	24V	561707	FR JCT BOX	ABS - VR1 RLY
R 53	1.1	24V	561991	RR JCT BOX	ENGINE RUN (24) RR
R 54	1.1	24V	561991	BATT. CPT	12V CUT OUT RLY RR
R 55	1.1	24V	561991	BATT. CPT.	12V CUT OUT RLY FR
R 57	9.1	24V	561707	FR JCT BOX	DAY'S BLINKER
R 59	9.3	12V	562092	RR JCT BOX	DOCKING LTS
R 61	9.3	24V	561707	RR JCT BOX	STOP LTS-JACOB & RET. SIGNAL
R 66	20.3	24V	561707	SS JCT PANEL	SOUND SYSTEM VIDEO
R 67	20.1	24V	561707	SS JCT PANEL	SOUND SYSTEM RADIO
R 68	20.1	24V	561991	SS JCT PANEL	SOUND SYSTEM AMPLIFIER
R 78	1.1	12V	562092	FR JCT BOX	MASTER SWITCH
R 79	23	24V	561707	GALLEY CPT	GALLEY-REFRIGERATOR
R 80	11.1	24V	561707	RR JCT BOX	ENGINE COMPARTMENT LTS

No.	PAGE	COIL V	#PREV.	LOCATION	FUNCTION
R 82	19	24V	561707	FR JCT BOX	RETARDER WT
R 84	8	24V	561707	RR JCT BOX	FAN CLUTCH-FIRST SPEED
R 85	8	24V	561707	RR JCT BOX	FAN CLUTCH-SECOND SPEED
R 87	19	24V	561707	RR JCT BOX	ENGINE BRAKE REQUEST WT
R 89	22	24V	561707	FR JCT BOX	HEATING WINDSHIELD
R 90	22	24V	561707	FR JCT BOX	HEATING WINDSHIELD
R 91	22	24V	561707	FR JCT BOX	HEATING WINDSHIELD
R 92	22	24V	561707	FR JCT BOX	HEATING WINDSHIELD
R 93	26	24V	561707	RR JCT BOX	PRE-HEAT WATER HEATER (WEBASTO)
R 94	25	24V	561707	RR JCT BOX	WCL - SYSTEM
R 95	25	24V	561707	RR JCT BOX	WCL - MAGNETIC SW SIGN
R 96	25	24V	561707	RR JCT BOX	WCL - DOOR AJAR ALARM
R 97	25	24V	561707	RR JCT BOX	WCL - DOOR AJAR PARK BRAKE
R 98	25	12V	561538	RR JCT BOX	WCL -.
R 99	8	24V	561707	RR JCT BOX	RADIATOR FAN CLUTCH
R 100	4	12V	561538	RR JCT BOX	GENERATOR SIGNAL
R 2010	26.2	24V	561230	WEBASTO PRE-HEAT	WEBASTO
V IMN	6	12V	562092	RR JCT BOX	VIM WORLD TR -NEUTRAL SIGNAL
V IMR	6	12V	562092	RR JCT BOX	VIM WORLD TR -B/U SIGNAL
V IM1	6	12V	562092	RR JCT BOX	VIM WORLD TR.-OUTPUT 1
V IM2	6	12V	562092	RR JCT BOX	VIM WORLD TR.-OUTPUT 2 ENG. BRK DISABLE
V IM3	6	12V	562092	RR JCT BOX	VIM WORLD TR.-OUTPUT 3 SPD SW. 5MPH NO NC
V IM4	6	12V	562092	RR JCT BOX	VIM WORLD TR.-OUTPUT 4 RETARD. ON SIGNAL

RELAYS NUMBER CODE

No.	PAGE	COIL V	#PREV.	LOCATION	FUNCTION
R F1	8	24V	561707	RR JCT BOX	FAN CLUTCH W/RET. SPEED 1
R F2	8	24V	561707	RR JCT BOX	FAN CLUTCH W/RET. SPEED 2
R F3	8	24V	560772	RR JCT BOX	TIME DELAY
R LA	16	24V	561707	UNDER DASH RH.	ENTRANCE DOOR SEDAN (LATCH)
R LO	16	24V	561707	UNDER DASH RH.	ENTRANCE DOOR SEDAN (PRESS. SW.)
R LT	16	24V	561707	UNDER DASH RH.	ENTRANCE DOOR SEDAN (LIGHT)
R LV	16	24V	561707	UNDER DASH RH.	ENTRANCE DOOR SEDAN (VALVE)
R 1	1.1	24V	561991	FR JCT BOX	ENGINE RUN (24) FR
R 2	2	24V	561991	BATT. CPT.	ENGINE RUN (12) FR & RR
R 3	4	24V	561707	BATT. CPT.	FIELD RELAY
R 4	4	24V	561005	BATT. CPT.	STARTING MOTOR
R 5	5	24V	561707	FR JCT BOX	CRUISE CTR. STOP SIGN.
R 6	9.3	24V	561707	RR JCT BOX	STOP LTS-PARKING BRAKE
R 7	5	24V	561707	FR JCT BOX	FAST IDLE
R 8	6	24V	561707	RR JCT BOX	12V IGNITION WT
R 9	9.3	24V	561707	RR JCT BOX	BACK-UP LTS
R 11	5	24V	561707	RR JCT BOX	12V IGNITION DDEC3
R 12	7	12V	562092	FR JCT BOX	ELECTRICAL HORNS
R 13	9.3	24V	561707	FR JCT BOX	FOG LTS
R 14	9.1	24V	561707	FR JCT BOX	BLINKER
R 15	9.1	24V	561707	FR JCT BOX	FR MARKER LTS
R 16	9.1	24V	561707	FR JCT BOX	IDENT. & CLEARANCE LTS
R 17	9.1	24V	561707	RR JCT BOX	TAIL,LICENCE,MARKER-RR LTS
R 18	9.1	24V	561707	FR JCT BOX	D R L-PARK BRK CUT-IN
R 19	9.1	24V	561707	FR JCT BOX	HEADLAMPS (HI)
R 20	9.1	24V	561707	FR JCT BOX	HEADLAMPS (LO)
R 21	9.2	24V	561707	FR JCT BOX	L.H. DIRECTIONNAL LT
R 23	9.2	24V	561707	FR JCT BOX	R.H. DIRECTIONNAL LT
R 24	9.2	24V	561707	FR JCT BOX	R.H. CORNERING LT
R 25	9.2	24V	561707	FR JCT BOX	L.H. CORNERING LT
R 26	9.3	24V	561707	RR JCT BOX	STOP LTS
R 27	11.2	24V	561707	RR JCT BOX	AISLE & EMERG.EXIT - LTS
R 28	11.2	24V	561707	FR JCT BOX	DASH LTS RHEOSTAT
R 29	11.3	24V	561707	RR JCT BOX	READING LTS R.H.
R 30	11.3	24V	561707	RR JCT BOX	READING LTS L.H.
R 31	11.3	24V	561707	RR JCT BOX	GENERAL LTS
R 32	11.4	24V	561707	RR JCT BOX	24V FLUORESCENT
R 33	13.1	12V	562092	FR JCT BOX	BLOWER CUT-IN RLY
R 34	13.1	24V	561707	RJB A/C JCT PANEL	A/C LOGIC PANEL
R 35	13.1	24V	561707	RJB A/C JCT PANEL	WATER PUMP
R 36	13.1	24V	561707	RJB A/C JCT PANEL	A/C COMPRESSOR CLUTCH
R 37	10	24V	561707	FR JCT BOX	KNEELING LT
R 39	13.2	24V	561005	BATT. CPT.	CONDENSER FAN MOTOR
R 40	13.2	24V	561014	BATT. CPT.	CONDENSER SPEED CTR HI
R 41	13.2	24V	561005	BATT. CPT.	CONDENSER SPEED CTR HI
R 43	18	24V	561707	FR JCT BOX	KNEELING SYSTEM
R 44	18	24V	561707	FR JCT BOX	KNEELING SYSTEM
R 47	23	24V	561707	GALLEY COMPT	GALLEY-LIQUID CONTAINERS
R 48	23	24V	561707	GALLEY COMPT	COFFEE MAKER
R 49	21	24V	561707	FR JCT BOX	ABS - SERVICE BRK RLY
R 50	21	24V	561707	FR JCT BOX	ABS - VR2 RLY
R 51	21	24V	561707	FR JCT BOX	ABS - WARNING RLY
R 52	21	24V	561707	FR JCT BOX	ABS - VR1 RLY
R 53	1.1	24V	561991	RR JCT BOX	ENGINE RUN (24) RR
R 54	1.1	24V	561991	BATT. CPT.	12V CUT OUT RLY RR
R 55	1.1	24V	561991	BATT. CPT.	12V CUT OUT RLY FR
R 57	9.1	24V	561707	FR JCT BOX	DAY'S BLINKER
R 59	9.3	12V	562092	RR JCT BOX	DOCKING LTS
R 61	9.3	24V	561707	RR JCT BOX	STOP LTS-JACOB & RET. SIGNAL
R 66	20.3	24V	561707	SS JCT PANEL	SOUND SYSTEM VIDEO
R 67	20.1	24V	561707	SS JCT PANEL	SOUND SYSTEM RADIO
R 68	20.1	24V	561991	SS JCT PANEL	SOUND SYSTEM AMPLIFIER
R 78	1.1	12V	562092	FR JCT BOX	MASTER SWITCH
R 79	23	24V	561707	GALLEY CPT.	GALLEY-REFRIGERATOR
R 80	11.1	24V	561707	RR JCT BOX	ENGINE COMPARTMENT LTS

No.	PAGE	COIL V	#PREV.	LOCATION	FUNCTION
R 82	19	24V	561707	FR JCT BOX	RETARDER WT
R 84	8	24V	561707	RR JCT BOX	FAN CLUTCH-FIRST SPEED
R 85	8	24V	561707	RR JCT BOX	FAN CLUTCH-SECOND SPEED
R 87	19	24V	561707	RR JCT BOX	ENGINE BRAKE REQUEST WT
R 89	22	24V	561707	FR JCT BOX	HEATING WINDSHIELD
R 90	22	24V	561707	FR JCT BOX	HEATING WINDSHIELD
R 91	22	24V	561707	FR JCT BOX	HEATING WINDSHIELD
R 92	22	24V	561707	FR JCT BOX	HEATING WINDSHIELD
R 93	26	24V	561707	RR JCT BOX	PRE-HEAT WATER HEATER (WEBASTO)
R 94	25	24V	561707	RR JCT BOX	WCL - SYSTEM
R 95	25	24V	561707	RR JCT BOX	WCL - MAGNETIC SW. SIGN.
R 96	25	24V	561707	RR JCT BOX	WCL - DOOR AJAR ALARM
R 97	25	24V	561707	RR JCT BOX	WCL - DOOR AJAR PARK. BRAKE
R 98	25	12V	561538	RR JCT BOX	WCL -.
R 99	8	24V	561707	RR JCT BOX	RADIATOR FAN CLUTCH
R 100	4	12V	561538	RR JCT BOX	GENERATOR SIGNAL
R 101	13.1	24V	561707	FR JCT BOX	DAMPER GAZ CYLINDER
R 102	13.1	24V	561707	RR JCT BOX	COMPRESSEUR CLUTCH CUT-OUT BELOW 40 F
R 2010	26.2	24V	561230	WEBASTO PRE-HEAT	WEBASTO
V IMN	6	12V	562092	RR JCT BOX	VIM WORLD TR.-NEUTRAL SIGNAL
V IMR	6	12V	562092	RR JCT BOX	VIM WORLD TR.-B/U SIGNAL
V IM1	6	12V	562092	RR JCT BOX	VIM WORLD TR.-OUTPUT 1
V IM2	6	12V	562092	RR JCT BOX	VIM WORLD TR.-OUTPUT 2 ENG. BRK DISABLE
V IM3	6	12V	562092	RR JCT BOX	VIM WORLD TR.-OUTPUT 3 SPD SW. 5MPH NO NC
V IM4	6	12V	562092	RR JCT BOX	VIM WORLD TR.-OUTPUT 4 RETARD. ON SIGNAL

RESISTORS NUMBER CODE

No.	PAGE	OHM(S)	#PREV.	LOCATION	FUNCTION
RS 1	5	11 K	561898	FR JCT BOX	FAST IDLE DDEC CONTROL
RS 2	5	3.6 K	561897	FR JCT BOX	FAST IDLE DDEC CONTROL
RS 3	9.3	1 (2)	561537	FR JCT BOX	FOG LT - RH
RS 4	9.3	1 (2)	561537	FR JCT BOX	FOG LT - LH
RS 5	9.2	1 (2)	061976	FR JCT BOX	CORNERING LT - LH
RS 7	9.3	.82 (2)	060806	RR JCT BOX	PARKING BRAKE STOP LTS
RS 8	9.2	1 (2)	061976	FR JCT BOX	CORNERING LT - RH
RS 11	22	12	561191	FR TOP	DEFROSTER SPEED
RS 12	22	12	561191	FR TOP	DEFROSTER SPEED
RS 13	17	80 (2)	562108	FR TOP	FR DESTINATION SIGN
RS 9	9.3	1 (2)	061976	RR JCT BOX	DOCKING LT - RH
RS 10	9.3	1 (2)	061976	RR JCT BOX	DOCKING LT - LH
RS 17	7	220	562498	FR JCT BOX	FIRE ALARM
RS 18	8	75 K	064208	RR JCT BOX	FAN CLUTCH W/RETARDER
RS 20	15	1 K	562470	RR JCT BOX	WORLD TR. SPEED TO DDEC III

WIRING DIAGRAM KEYS

24-858-16
- GAUGE
- CIRCUIT NUMBER
- CIRCUIT VOLTAGE

WIRE CROSSING

WIRE SOLDERING JOINT

SHIELDED WIRES

TWISTED WIRES

STUD TERMINAL

JUNCTION BLOCK

DUMMY

FS — FROM GROUND STUD GROUND SECTION

CHASSIS GROUND

ACCESSORY CHASSIS GROUND

C23 — CONNECTOR CODE NUMBER
5 — PIN TERMINAL
- CAVITY NUMBER
- SOCKET TERMINAL

ILLUMINATING LAMP

FLUORESCENT LAMP

D3 — CODE NUMBER
ANODE — CATHODE — DIODE/RECTIFIER

RS2 — CODE NUMBER
4.3 KΩ — RESISTOR OHMS

CODE NUMBER — R2 — RELAY S.P.D.T. SINGLE POLE, DOUBLE THROW
SUPPRESSOR DIODE
COIL <85 — 86> COIL
N.O. <87 — 30> COM.
N.C. <87A

CODE NUMBER — R2 — RELAY S.P.S.T. SINGLE POLE, SINGLE THROW
SUPPRESSOR DIODE
COIL <85 — 86> COIL
N.O. <87 — 30> COM.

CODE NUMBER — R2 — RELAY S.P.D.T. SINGLE POLE, DOUBLE THROW
COIL <85 — 86> COIL
N.O. <87 — 30> COM.
N.C. <87A

CODE NUMBER → R2 — RELAY-MAGNETIC D.P.D.T. DOUBLE POLE, DOUBLE THROW
COIL — COIL
COM. — N.O.
COM. — N.C.
BAT.

CODE NUMBER → R2 — RELAY-MAGNETIC S.P.S.T. SINGLE POLE, SINGLE THROW
COIL — COIL
COM. — N.O.
BAT.

7.5 — AMPACITY FUSE

CB23 — CIRCUIT BREAKER CODE NUMBER
10A — AMPACITY

N.O. / N.C. / COM. — SWITCH S.P.D.T. SINGLE POLE, DOUBLE THROW

PRESSURE SWITCH N.C.

PRESSURE SWITCH N.O.

SWITCH MOMENTARY CONTACT

SWITCH PUSH BUTTON

SWITCH MECHANICAL LOCK

M — ELECTRIC MOTOR

110V EXTERIOR PLUG RECEPTACLE

ELECTRIC HORN

THERMOSTAT

HEATER

SOLENOID VALVE

BATTERY

FR. JCT BOX - JUNCTION BLOCK

RR. JCT BOX - JUNCTION BLOCK

BAT. JCT PANEL - JUNCTION BLOCK

BLK	BLACK
YEL	YELLOW
RED	RED
WH	WHITE
GRY	GREY
ORA	ORANGE
BLU	BLUE
GRN	GREEN
BRN	BROWN
PUR	PURPLE
PK	PINK

FUSES CODE

No.	PAGE	AMP.	#PREV.	LOCATION	FUNCTION
F 1	6	10A	562407	RR. JCT. BOX	WORLD TRANSMISSION 12V BATTERY
F 2	6	10A	562407	RR. JCT. BOX	WORLD TRANSMISSION 12V IGNITION
F 3	7	20A	562605	FR. JCT. BOX	ELECTRICAL HORNS
F 4	7	5A	562259	FR. JCT. BOX	FIRE ALARM
F 5	8	10A	562407	RR. JCT. BOX	AIR DRYER
F 6	8	5A	562602	FR. JCT. BOX	ETHER COLD START & CRUISE DECEL SW.
F 7	8	5A	562602	FR. JCT. BOX	PARKING BRAKE PRESSURE SW.
F 8	9.2	10A	562407	FR. JCT. BOX	CORNERING LTS
F 9	9.3	15A	562604	RR. JCT. BOX	DOCKING LTS
F 10	9.3	15A	562604	FR. JCT. BOX	FOG LTS
F 11	11.1	5A	562259	FR. JCT. BOX	FRONT SERVICE CPT LTS
F 12	11.2	10A	562407	RR. JCT. BOX	AISLE LTS
F 13	11.2	7.5A	562602	RR. JCT. BOX	EMERGENCY EXIT LTS
F 14	11.3	7.5A	562602	FR. JCT. BOX	DRIVER'S LTS
F 15	11.3	15A	562604	RR. JCT. BOX	READING LTS RH
F 16	11.3	15A	562604	RR. JCT. BOX	READING LTS LH
F 17	11.3	10A	562407	RR. JCT. BOX	GENERAL LTS
F 18	11.4	10A	562407	RR. JCT. BOX	24V FLUORESCENT RH
F 19	11.4	10A	562407	RR. JCT. BOX	24V FLUORESCENT LH
F 20	12	5A	562259	FR. JCT. BOX	HOSTESS & PASSENGER CHIME
F 21	12	10A	560061	RR. JCT. BOX	PRIME PUMP
F 22	14	10A	562407	FR. JCT. BOX	POWER 12V OUTLET
F 23	14	15A	562604	FR. JCT. BOX	DRIVER'S WINDOW LIFTER
F 24	14	10A	562407	FR. JCT. BOX	CIGAR LIGHTER
F 25	14	3A	562599	FR. JCT. BOX	SUN VISOR
F 26	15	5A	562259	FR. JCT. BOX	TACHOGRAPH HEAD & WATER HTR TIMER
F 27	23	5A	562259	RR. JCT. BOX	GALLEY LAMP
F 28	17	10A	562407	RR. JCT. BOX	LAVATORY PUMP
F 29	17	7.5A	562602	RR. JCT. BOX	LAVATORY LTS
F 31	17	5A	562602	FR. JCT. BOX	FRONT DESTINATION SIGN
F 32	11.3	5A	562259	FR. JCT. BOX	PASSENGER NO SMOKING LTS
F 33	18	5A	562259	FR. JCT. BOX	KNEELING SYSTEM
F 34	19	3A	562599	FR. JCT. BOX	LUGGAGE DOOR LOCK
F 39	22	10A	562407	FR. JCT. BOX	UPPER WINDSHIELD FAN DEFROST
F 40	22	20A	562605	FR. JCT. BOX	HEATED WINDSCHIELD LH
F 41	22	20A	562605	FR. JCT. BOX	HEATED WINDSCHIELD RH
F 46	24	7.5A	562602	FR. JCT. BOX	MIRROR ADJUST & HEATED 24V SPARTAN
F 47	24	7.5A	562407	FR. JCT. BOX	MIRROR ADJUST & HEATED 12V RAMCO
F 48	25	10A	562407	RR. JCT. BOX	WHEEL CHAIR LIFT POWER CONTROL
F 49	26	20A	562605	RR. JCT. BOX	PRE-HEAT WATER HEATER WEBASTO
F 50	26	20A	562605	RR. JCT. BOX	PRE-HEAT WATER HEATER
F 51	11.2	7.5A	562602	RR. JCT. BOX	HAR RACK CPT LTS
F 57	17	5A	562259	RR. JCT. BOX	LAVATORY FLUORESCENT
F 60	27	3A	560893	CABL. MONITOR	BACK-UP MONITOR (CLARION)
F 61	27	1A	560893	FR. JCT. BOX	INTERCOM
F 70	23	7.5A	562602	GALLEY PANEL	GALLEY RH CONTAINER
F 71	23	7.5A	562602	GALLEY PANEL	GALLEY LH CONTAINER
F 72	23	10A	562407	GALLEY PANEL	GALLEY REFRIGERATOR COMPRESSOR
F 73	23	35A	562608	GALLEY PANEL	GALLEY COFFEMAKER
F 74	23	7.5	560598	BAT. CPT.	GALLEY REFRIGERATOR

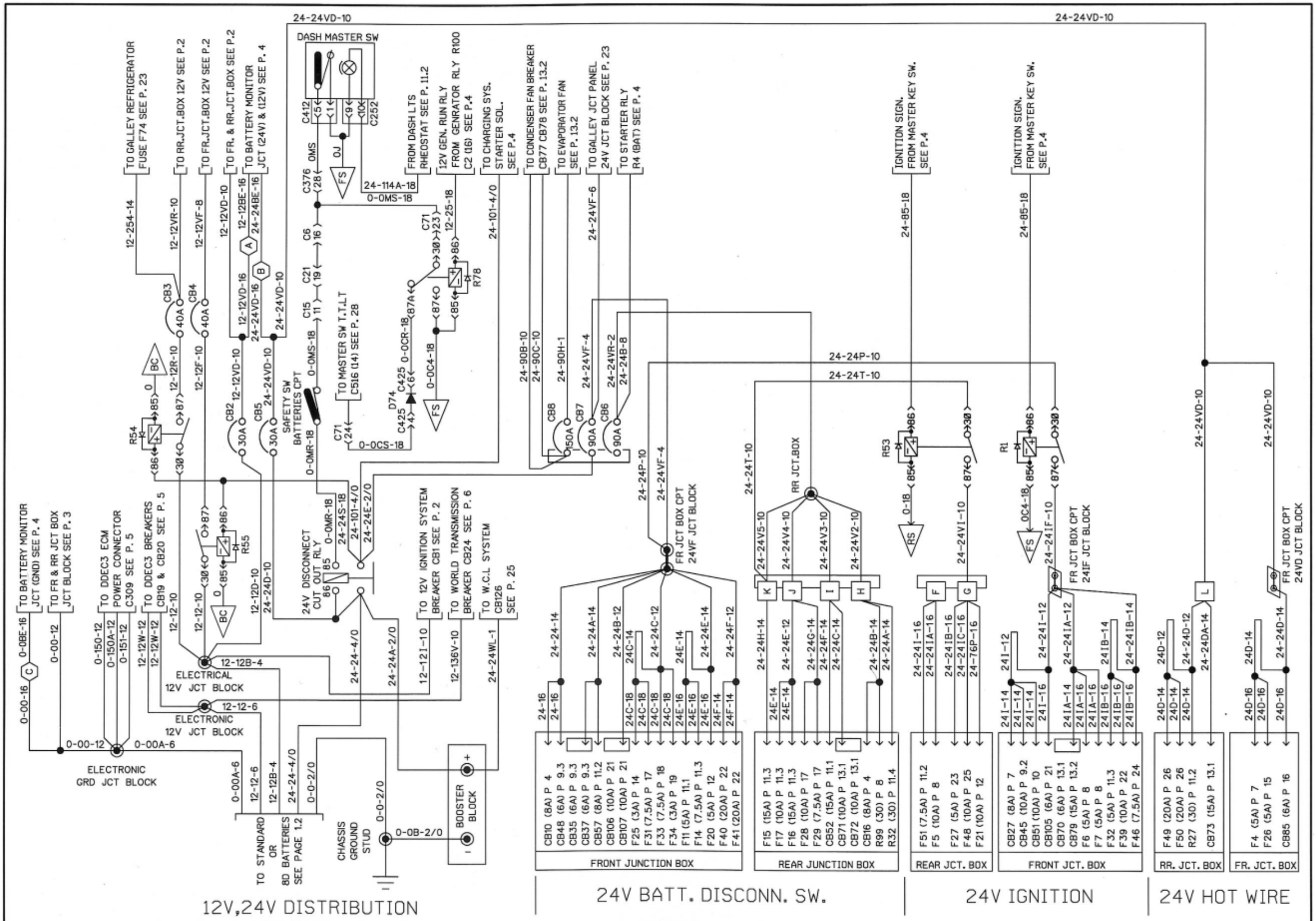

PREVOST	WIRING DIAGRAM	NO: D060882	PAGE: 1.1	REVISION 00

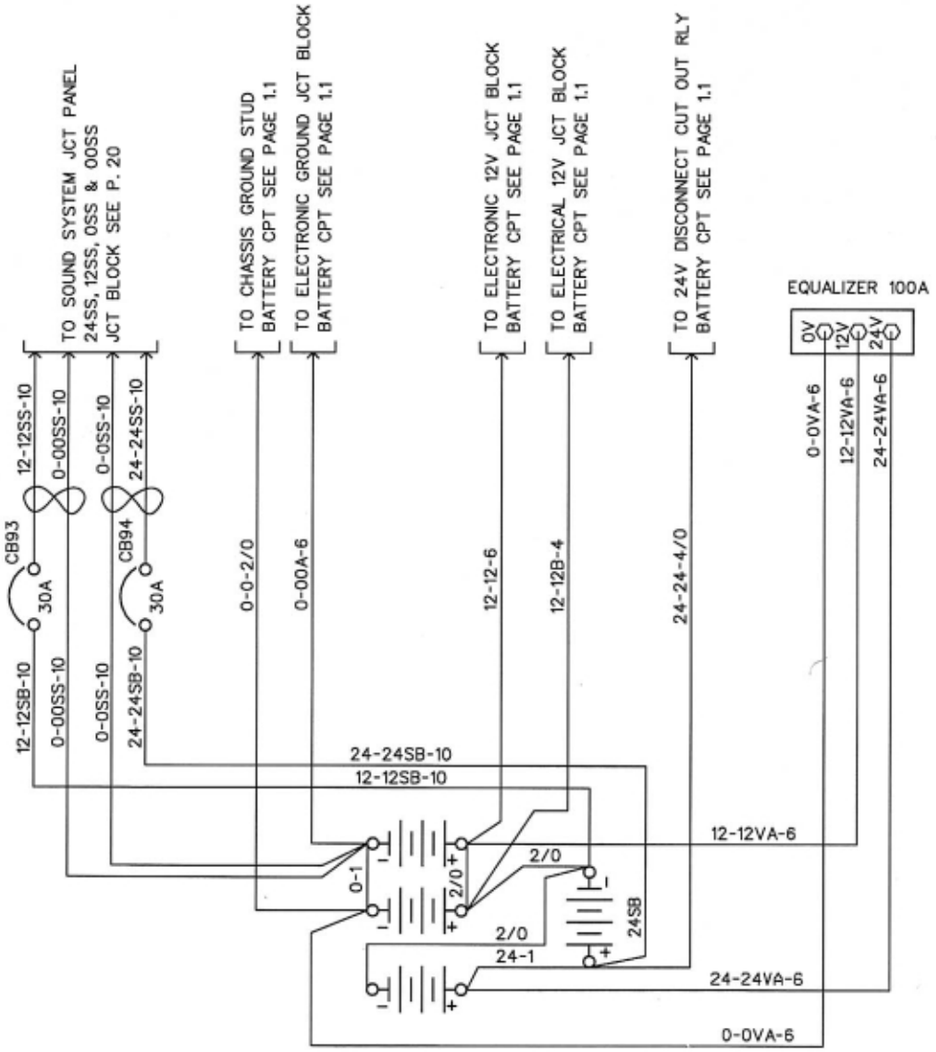

STANDARD BATTERIES

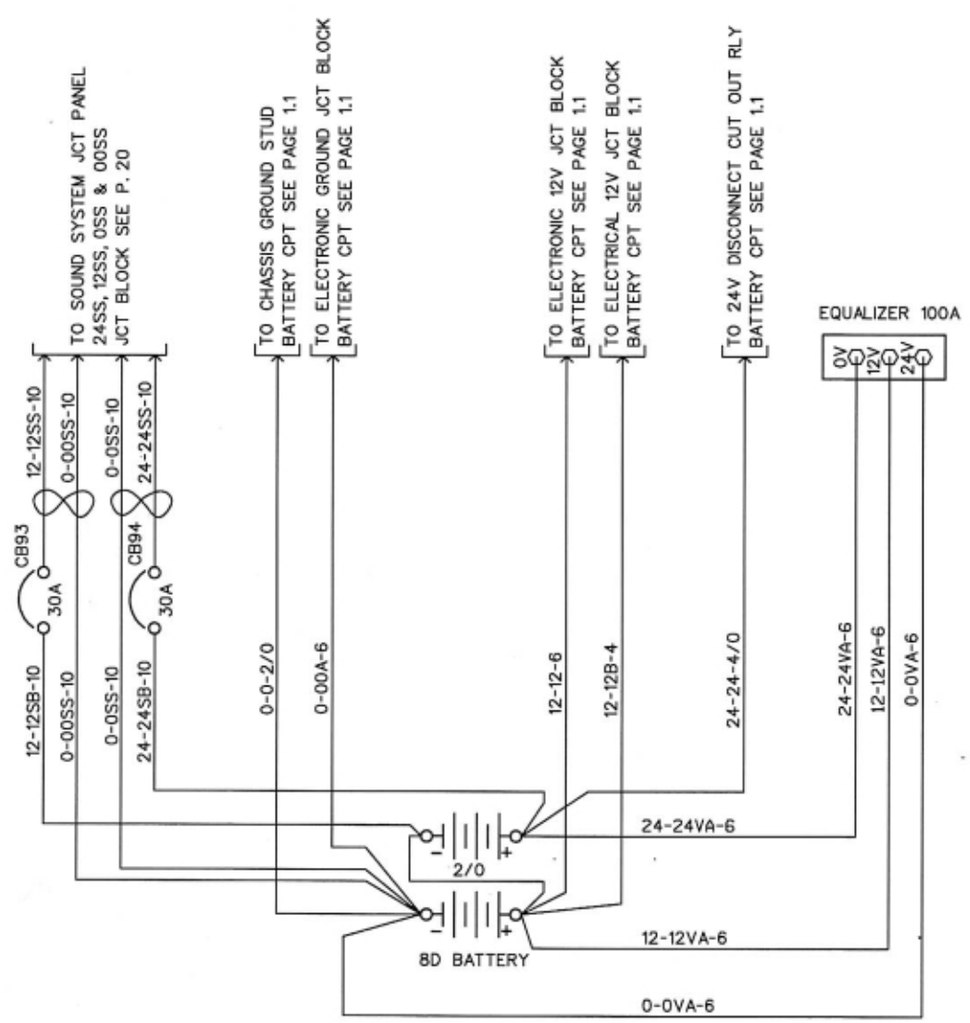

8D BATTERIES

PREVOST	WIRING DIAGRAM	NO: D060882	PAGE: 1.2	REVISION 00

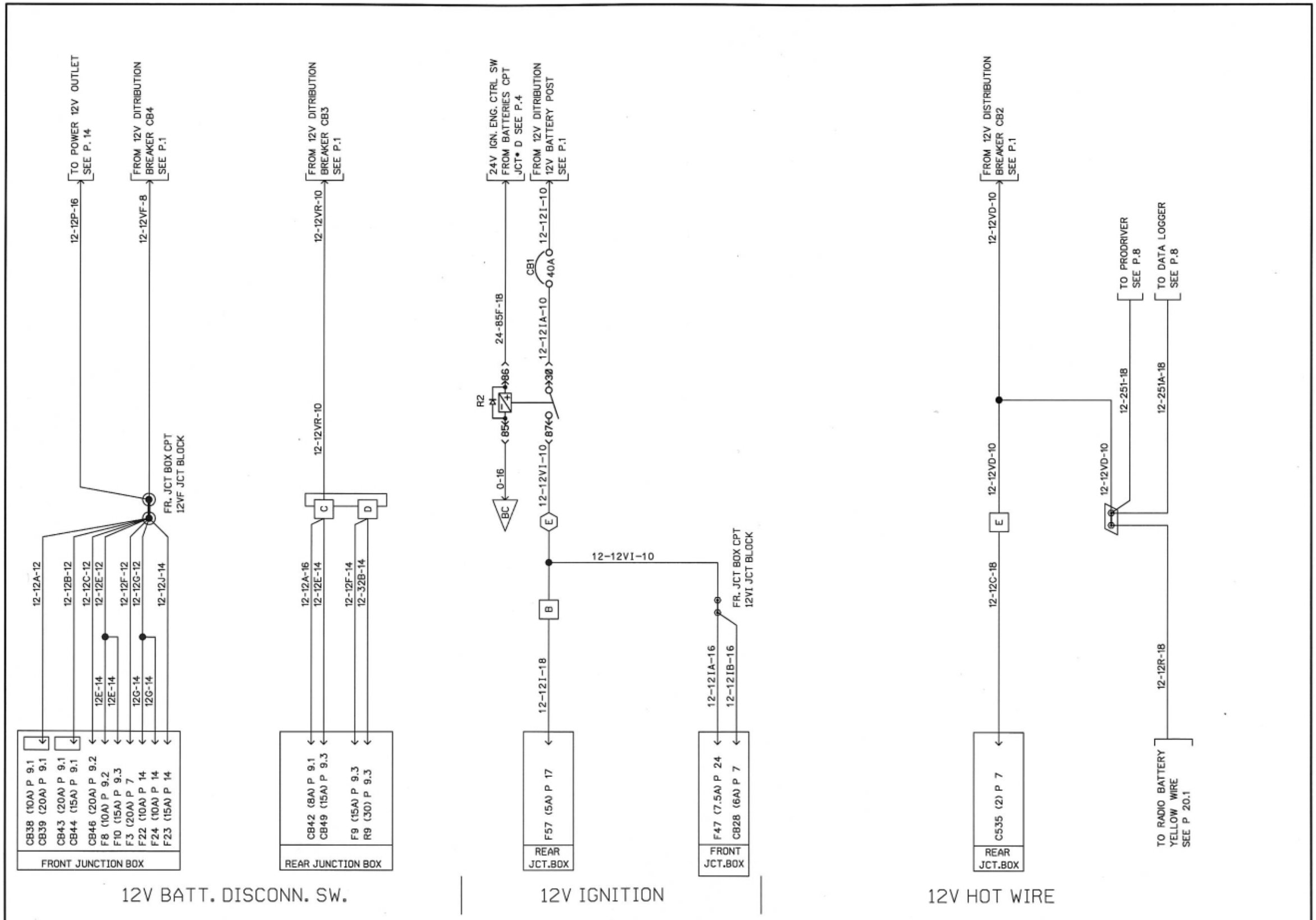

PREVOST	WIRING DIAGRAM	NO: D060882	PAGE: 2	REVISION 01

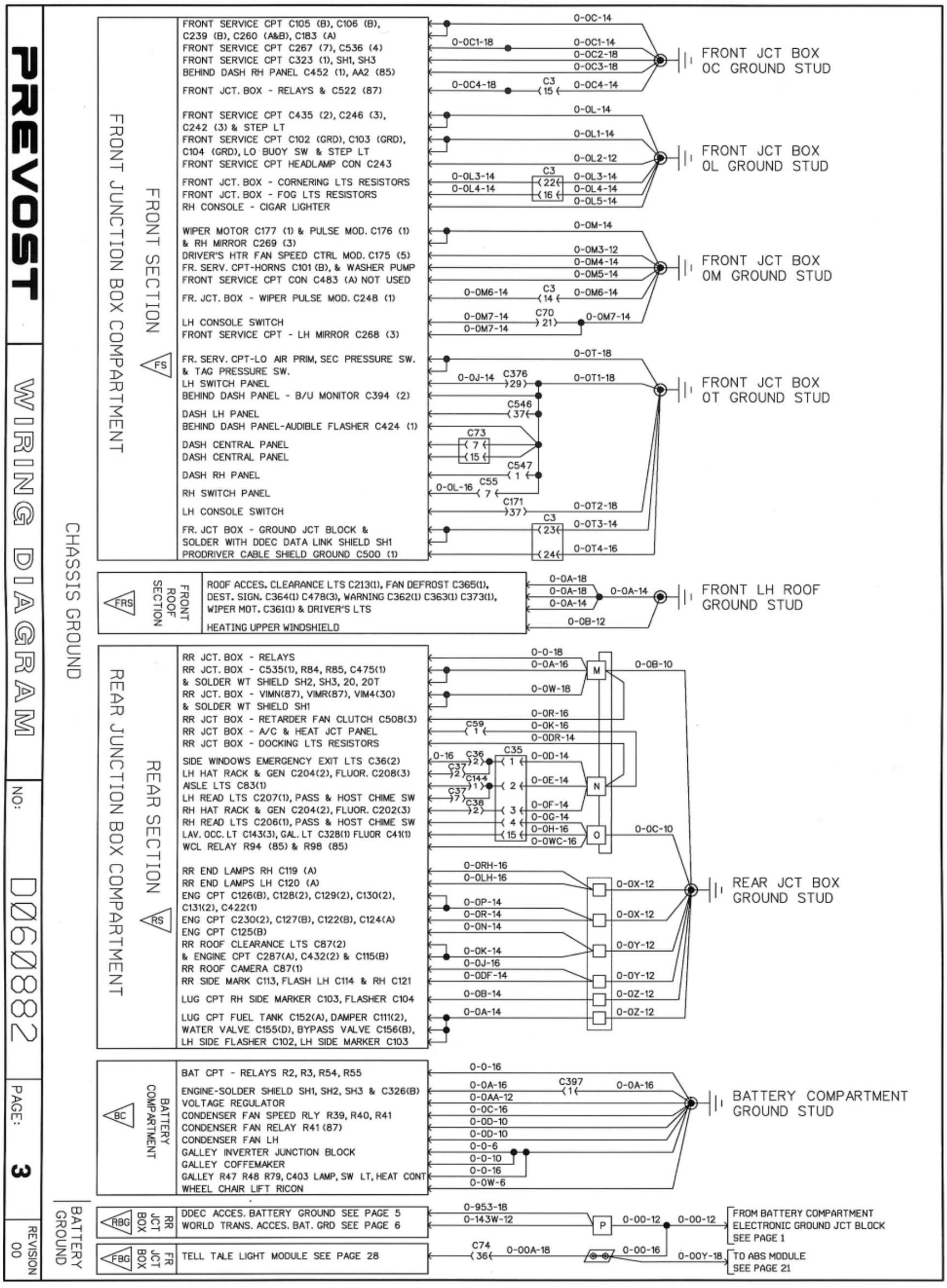
PREVOST
WIRING DIAGRAM
CHASSIS GROUND
FRONT JUNCTION BOX COMPARTMENT
FRONT SECTION
FS
FRONT SERVICE CPT C105 (B), C106 (B), C239 (B), C260 (A&B), C183 (A)
FRONT SERVICE CPT C267 (7), C536 (4)
FRONT SERVICE CPT C323 (1), SH1, SH3
BEHIND DASH RH PANEL C452 (1), AA2 (85)
FRONT JCT. BOX - RELAYS & C522 (87)
FRONT SERVICE CPT C435 (2), C246 (3), C242 (3) & STEP LT
FRONT SERVICE CPT C102 (GRD), C103 (GRD), C104 (GRD), LO BUOY SW & STEP LT
FRONT SERVICE CPT HEADLAMP CON C243
FRONT JCT. BOX - CORNERING LTS RESISTORS
FRONT JCT. BOX - FOG LTS RESISTORS
RH CONSOLE - CIGAR LIGHTER
WIPER MOTOR C177 (1) & PULSE MOD. C176 (1) & RH MIRROR C269 (3)
DRIVER'S HTR FAN SPEED CTRL MOD. C175 (5)
FR. SERV. CPT-HORNS C101 (B), & WASHER PUMP
FRONT SERVICE CPT CON C483 (A) NOT USED
FR. JCT. BOX - WIPER PULSE MOD. C248 (1)
LH CONSOLE SWITCH
FRONT SERVICE CPT - LH MIRROR C268 (3)
FR. SERV. CPT-LO AIR PRIM, SEC PRESSURE SW. & TAG PRESSURE SW.
LH SWITCH PANEL
BEHIND DASH PANEL - B/U MONITOR C394 (2)
DASH LH PANEL
BEHIND DASH PANEL-AUDIBLE FLASHER C424 (1)
DASH CENTRAL PANEL
DASH CENTRAL PANEL
DASH RH PANEL
RH SWITCH PANEL
LH CONSOLE SWITCH
FR. JCT BOX - GROUND JCT BLOCK & SOLDER WITH DDEC DATA LINK SHIELD SH1
PRODRIVER CABLE SHIELD GROUND C500 (1)
FRONT JCT BOX 0C GROUND STUD
FRONT JCT BOX 0L GROUND STUD
FRONT JCT BOX 0M GROUND STUD
FRONT JCT BOX 0T GROUND STUD
FRONT ROOF SECTION
FRS
ROOF ACCES. CLEARANCE LTS C213(1), FAN DEFROST C365(1), DEST. SIGN. C364(1) C478(3), WARNING C362(1) C363(1) C373(1), WIPER MOT. C361(1) & DRIVER'S LTS
HEATING UPPER WINDSHIELD
FRONT LH ROOF GROUND STUD
REAR JUNCTION BOX COMPARTMENT
REAR SECTION
RS
RR JCT. BOX - RELAYS
RR JCT. BOX - C535(1), R84, R85, C475(1) & SOLDER WT SHIELD SH2, SH3, 20, 20T
RR JCT. BOX - VIMN(87), VIMR(87), VIM4(30) & SOLDER WT SHIELD SH1
RR JCT BOX - RETARDER FAN CLUTCH C508(3)
RR JCT BOX - A/C & HEAT JCT PANEL
RR JCT BOX - DOCKING LTS RESISTORS
SIDE WINDOWS EMERGENCY EXIT LTS C36(2)
LH HAT RACK & GEN C204(2), FLUOR. C208(3)
AISLE LTS C83(1)
LH READ LTS C207(1), PASS & HOST CHIME SW
RH HAT RACK & GEN C204(2), FLUOR. C202(3)
RH READ LTS C206(1), PASS & HOST CHIME SW
LAV. OCC. LT C143(3), GAL. LT C328(1) FLUOR C41(1)
WCL RELAY R94 (85) & R98 (85)
RR END LAMPS RH C119 (A)
RR END LAMPS LH C120 (A)
ENG CPT C126(B), C128(2), C129(2), C130(2), C131(2), C422(1)
ENG CPT C230(2), C127(B), C122(B), C124(A)
ENG CPT C125(B)
RR ROOF CLEARANCE LTS C87(2) & ENGINE CPT C287(A), C432(2) & C115(B)
RR ROOF CAMERA C87(1)
RR SIDE MARK C113, FLASH LH C114 & RH C121
LUG CPT RH SIDE MARKER C103, FLASHER C104
LUG CPT FUEL TANK C152(A), DAMPER C111(2), WATER VALVE C155(D), BYPASS VALVE C156(B), LH SIDE FLASHER C102, LH SIDE MARKER C103
REAR JCT BOX GROUND STUD
BATTERY COMPARTMENT
BC
BAT CPT - RELAYS R2, R3, R54, R55
ENGINE-SOLDER SHIELD SH1, SH2, SH3 & C326(B)
VOLTAGE REGULATOR
CONDENSER FAN SPEED RLY R39, R40, R41
CONDENSER FAN RELAY R41 (87)
CONDENSER FAN LH
GALLEY INVERTER JUNCTION BLOCK
GALLEY COFFEMAKER
GALLEY R47 R48 R79, C403 LAMP, SW LT, HEAT CONT
WHEEL CHAIR LIFT RICON
BATTERY COMPARTMENT GROUND STUD
BATTERY GROUND
RBG
RR JCT BOX
DDEC ACCES. BATTERY GROUND SEE PAGE 5
WORLD TRANS. ACCES. BAT. GRD SEE PAGE 6
FROM BATTERY COMPARTMENT ELECTRONIC GROUND JCT BLOCK SEE PAGE 1
FBG
FR JCT BOX
TELL TALE LIGHT MODULE SEE PAGE 28
TO ABS MODULE SEE PAGE 21
NO: D060882
PAGE: 3
REVISION 00

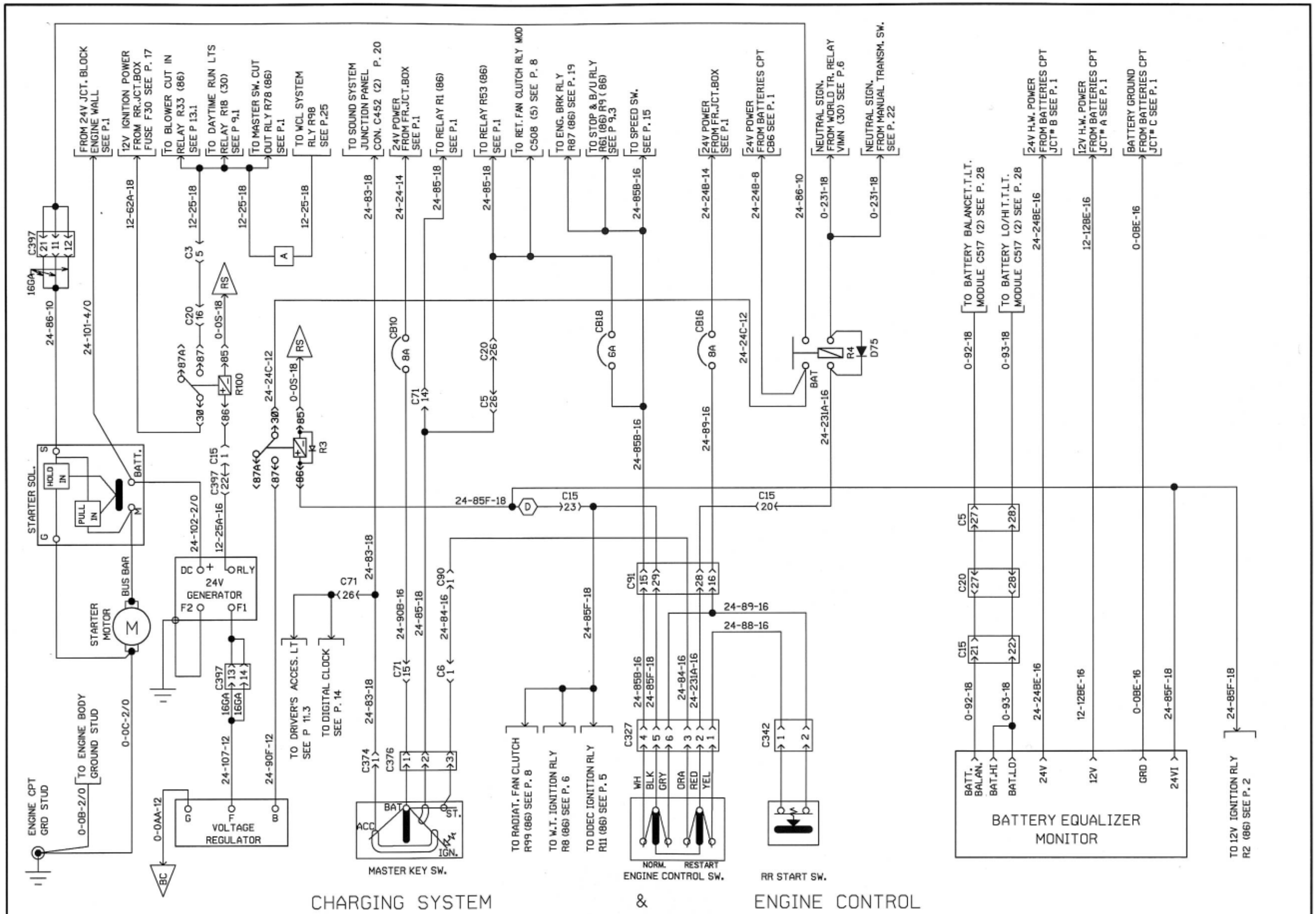

CHARGING SYSTEM & ENGINE CONTROL

PREVOST	WIRING DIAGRAM	NO: D060882	PAGE: 4	REVISION 00

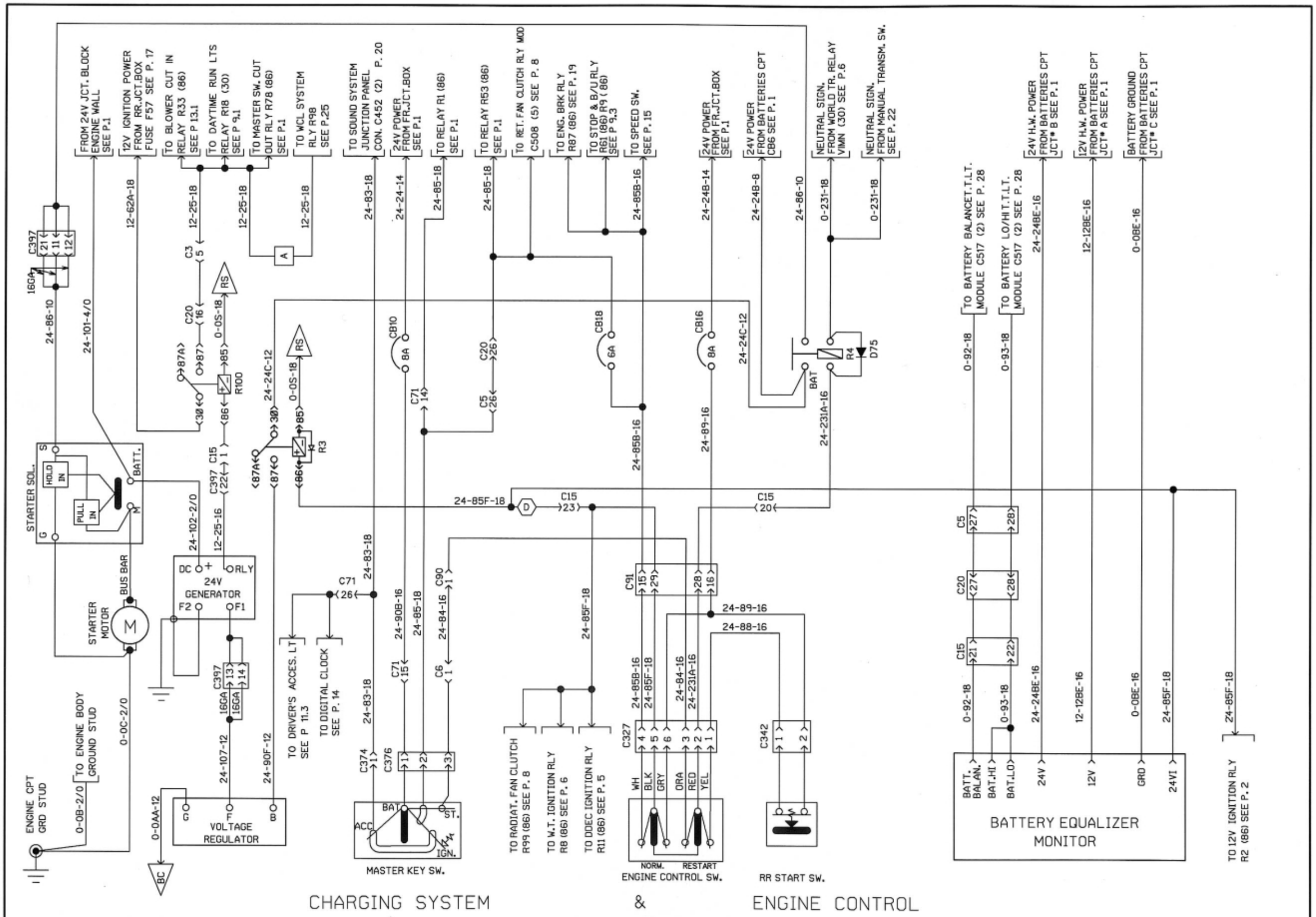

PREVOST	WIRING DIAGRAM	NO: D060882	PAGE: 4	REVISION 03

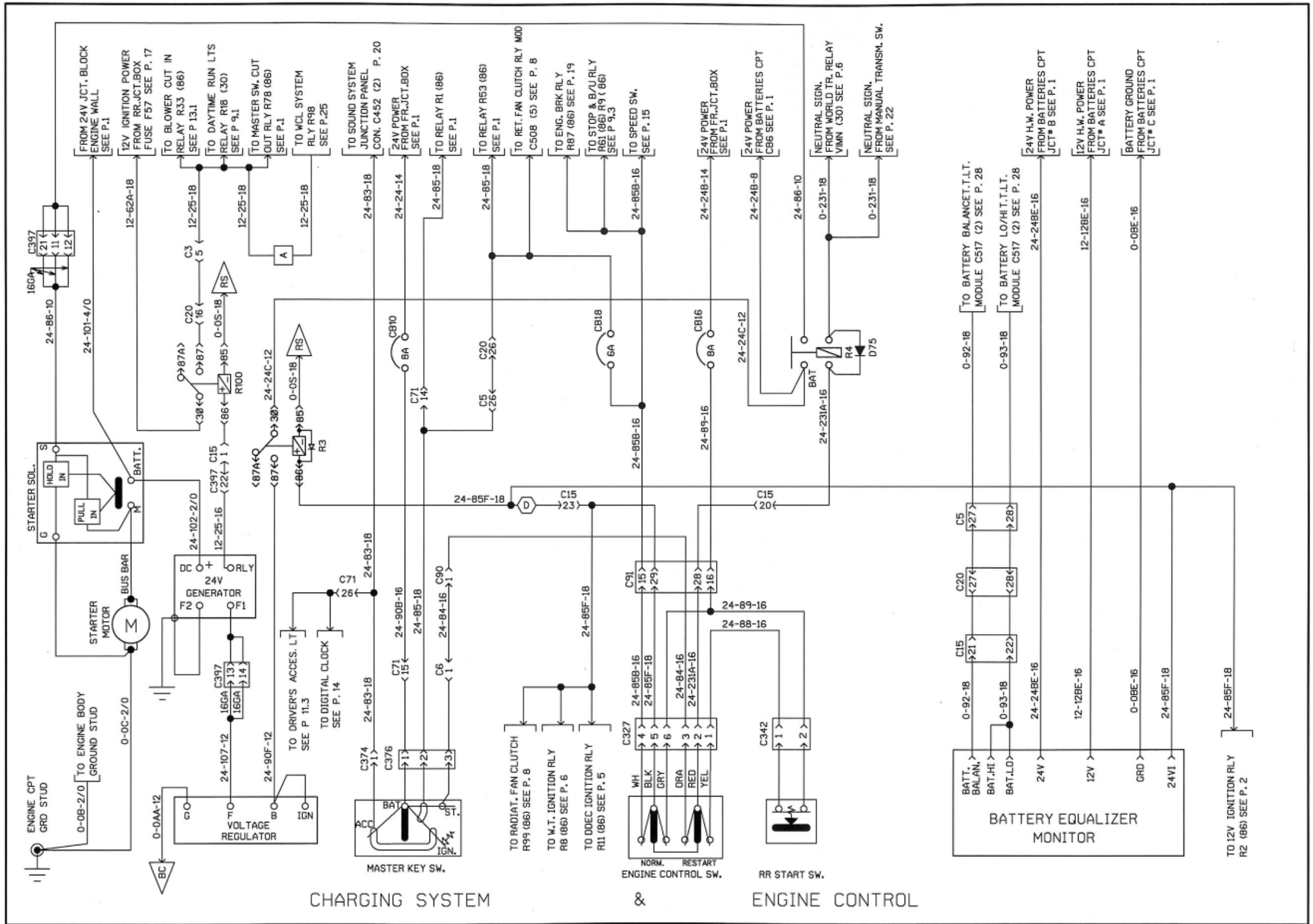

PREVOST	WIRING DIAGRAM	NO: D060882	PAGE: 4	REVISION 06

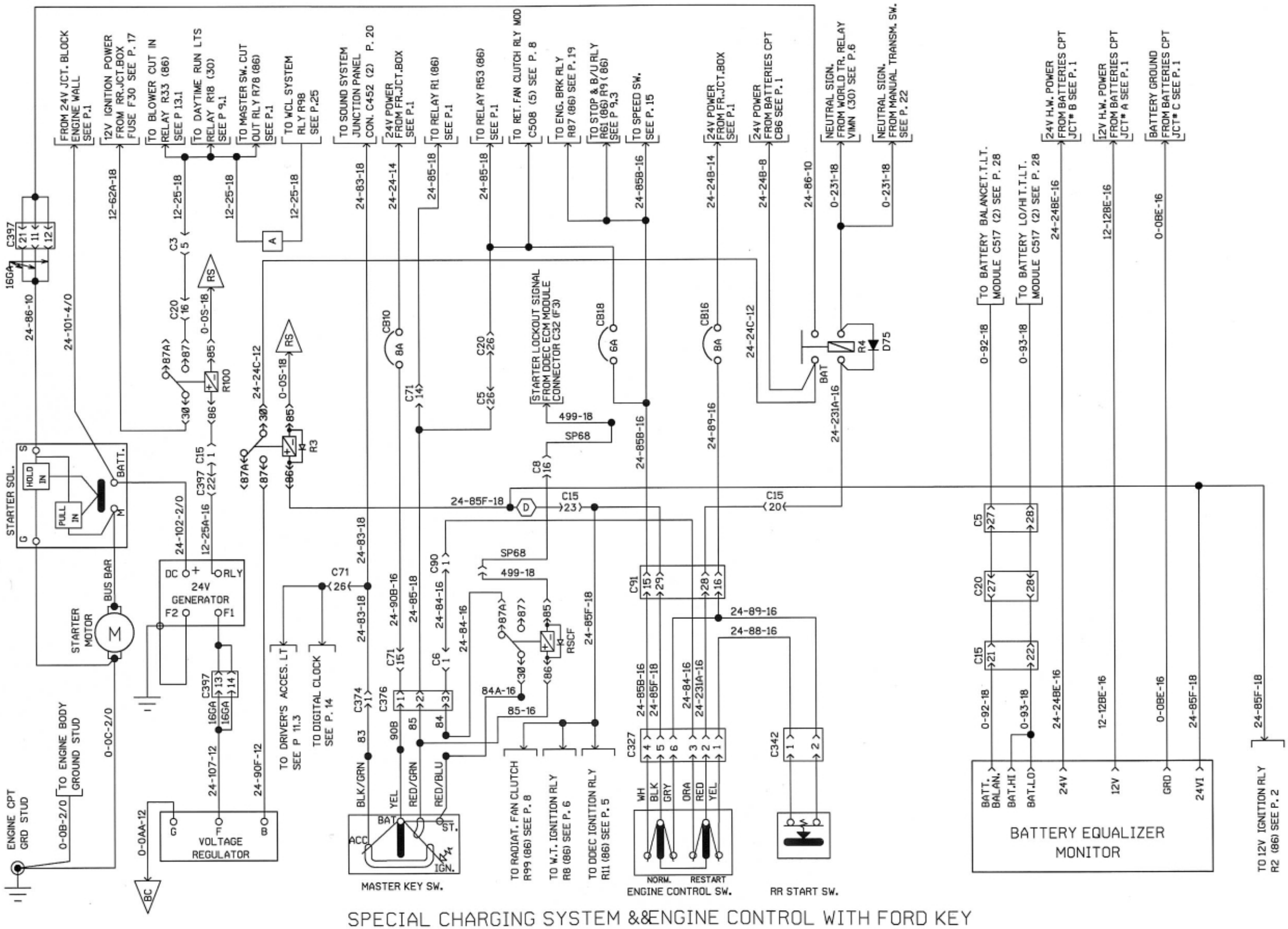

SPECIAL CHARGING SYSTEM &&ENGINE CONTROL WITH FORD KEY

PREVOST	WIRING DIAGRAM	NO: D060882	PAGE: 4sp1	REVISION 01

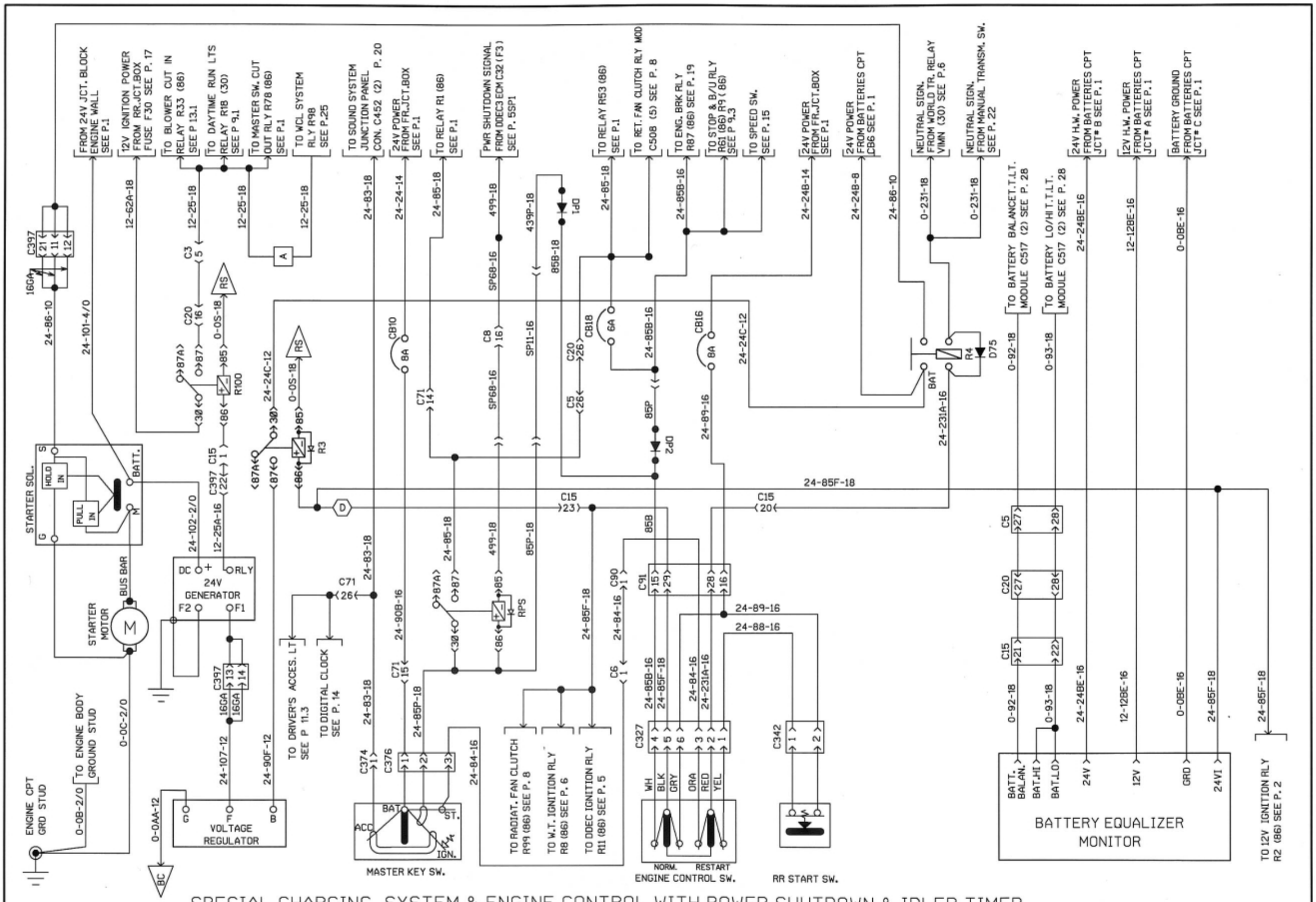

SPECIAL CHARGING SYSTEM & ENGINE CONTROL WITH POWER SHUTDOWN & IDLER TIMER

PREVOST	WIRING DIAGRAM	NO: D060882	PAGE: 4sp2	REVISION 01

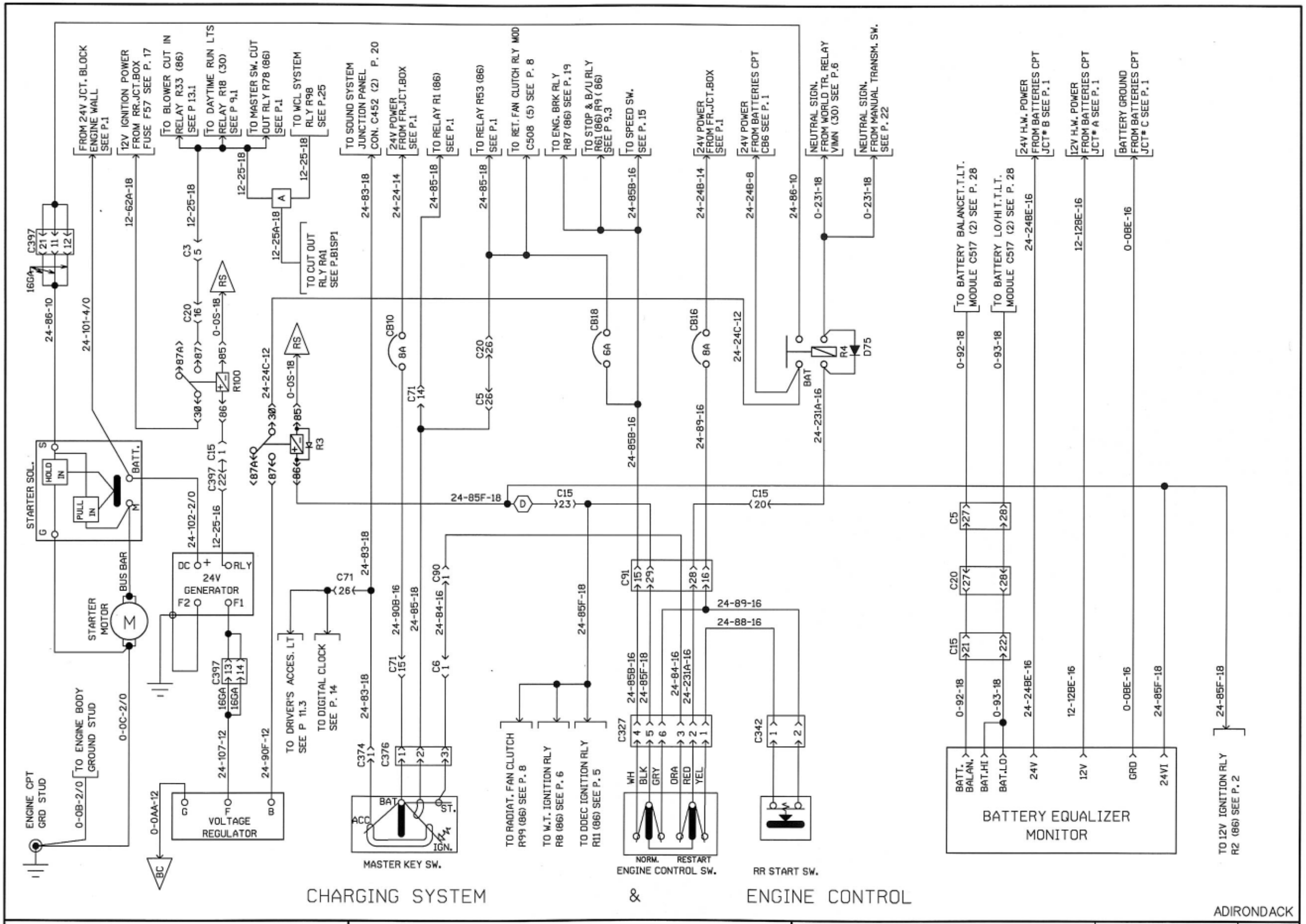

ADIRONDACK

PREVOST	WIRING DIAGRAM	NO: D060882	PAGE: 4sp3	REVISION 00

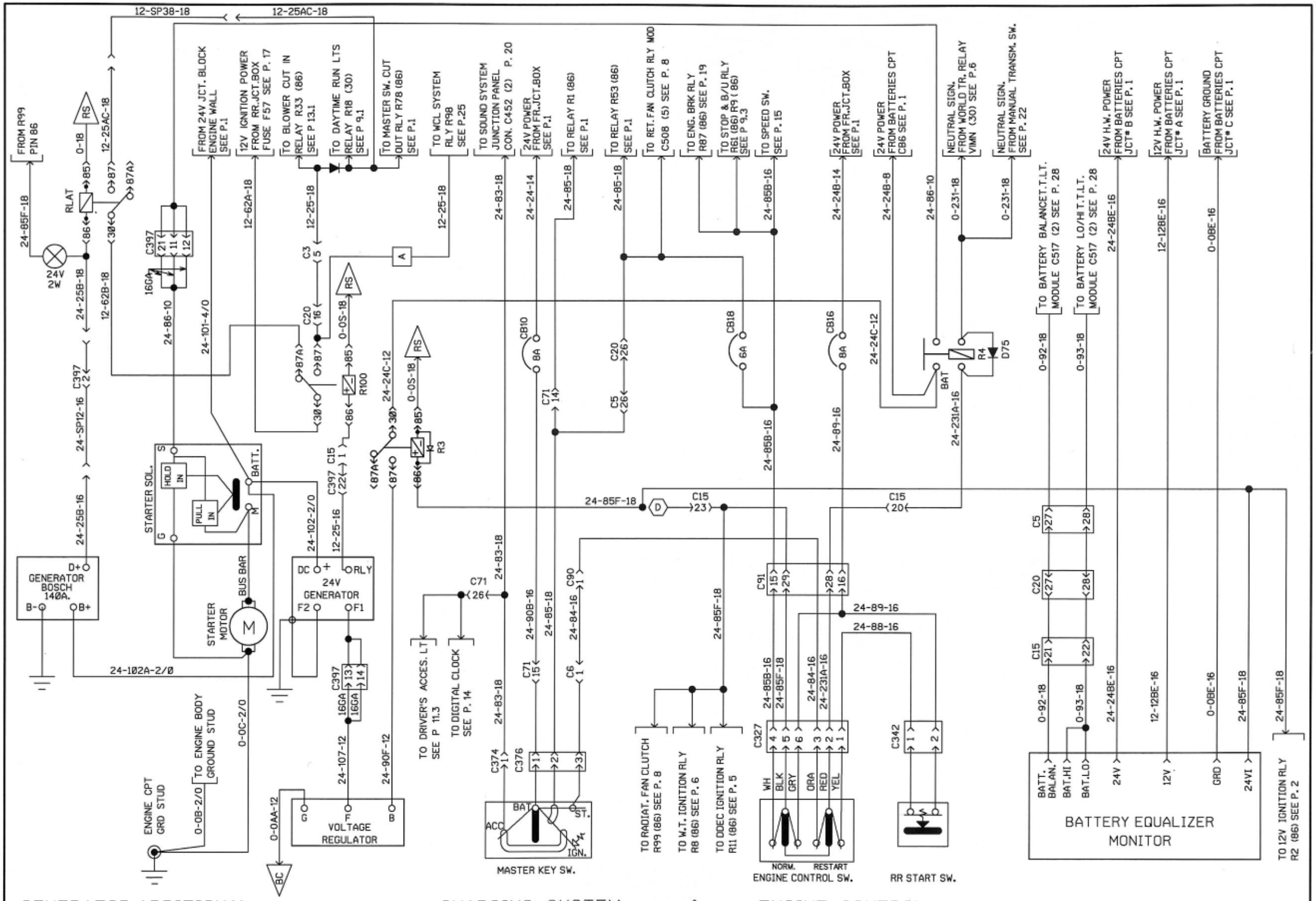

GENERATOR ADDITIONAL CHARGING SYSTEM & ENGINE CONTROL

V2071,V2078

PREVOST	WIRING DIAGRAM	NO: D060882	PAGE: 4sp4	REVISION 00

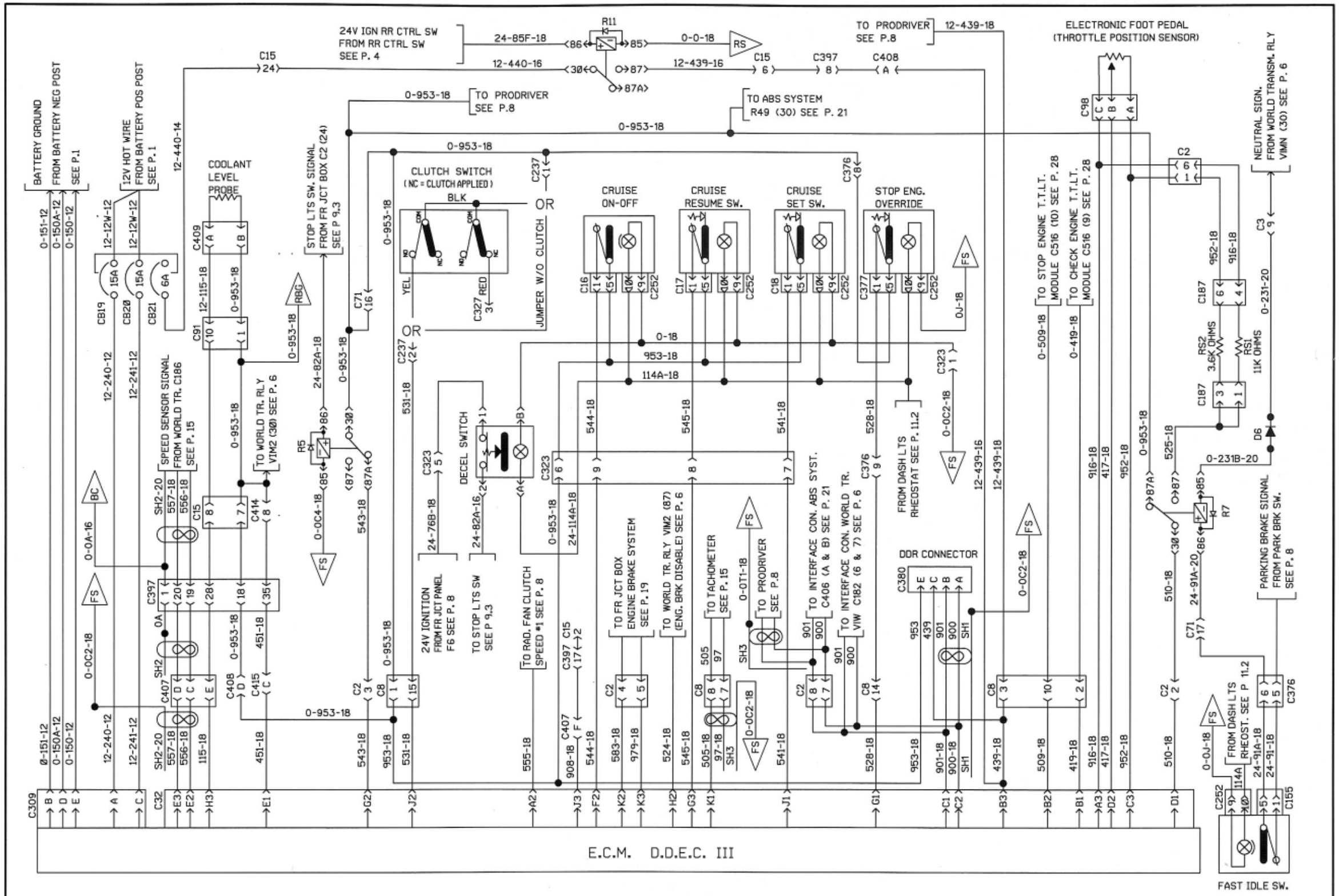

D.D.E.C. III

PREVOST	WIRING DIAGRAM	NO: D060882	PAGE: 5	REVISION 00

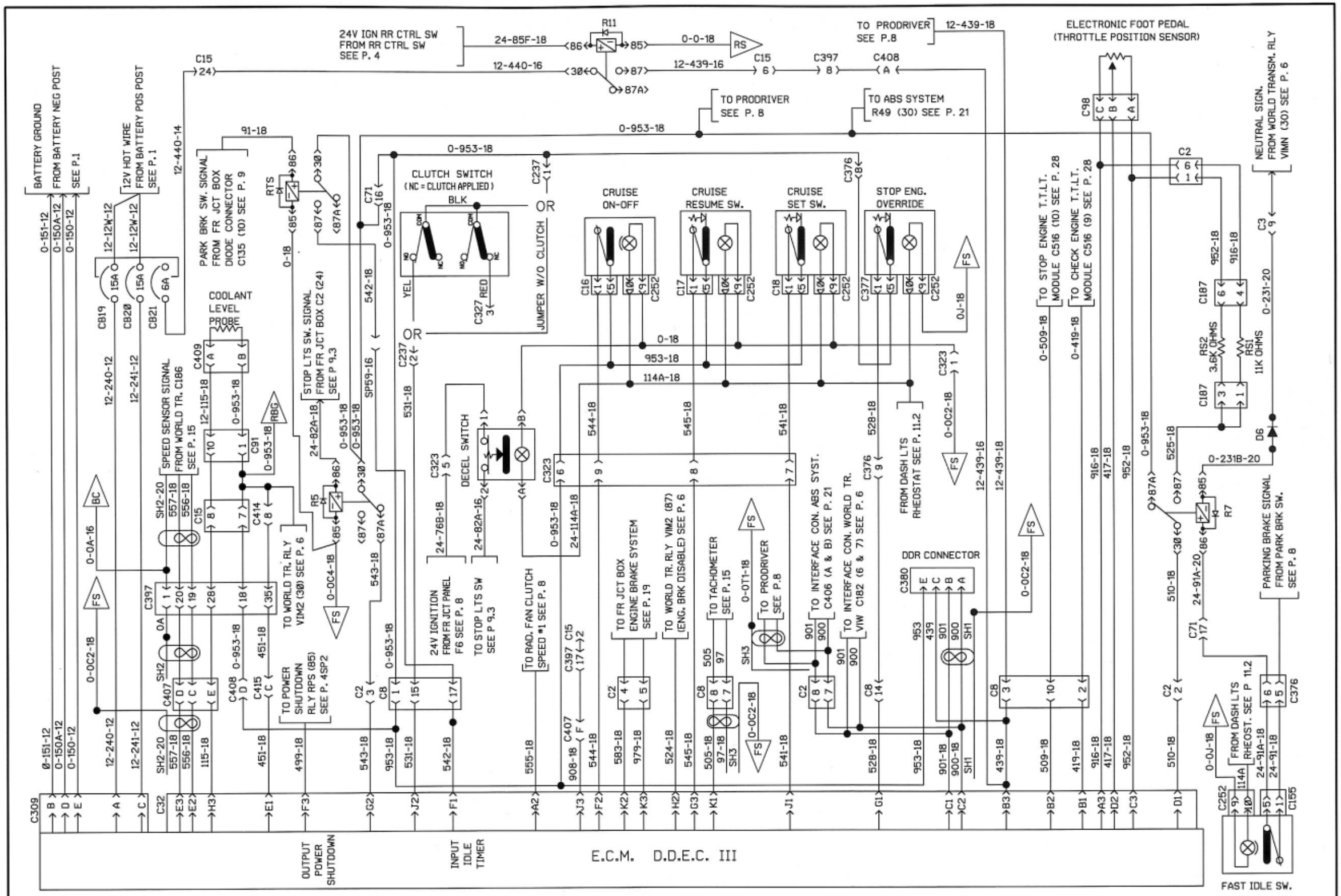

SPECIAL D.D.E.C. III WITH POWER SHUTDOW & IDLE TIMER

PREVOST	WIRING DIAGRAM	NO: D060882	PAGE: 5sp1	REVISION 01

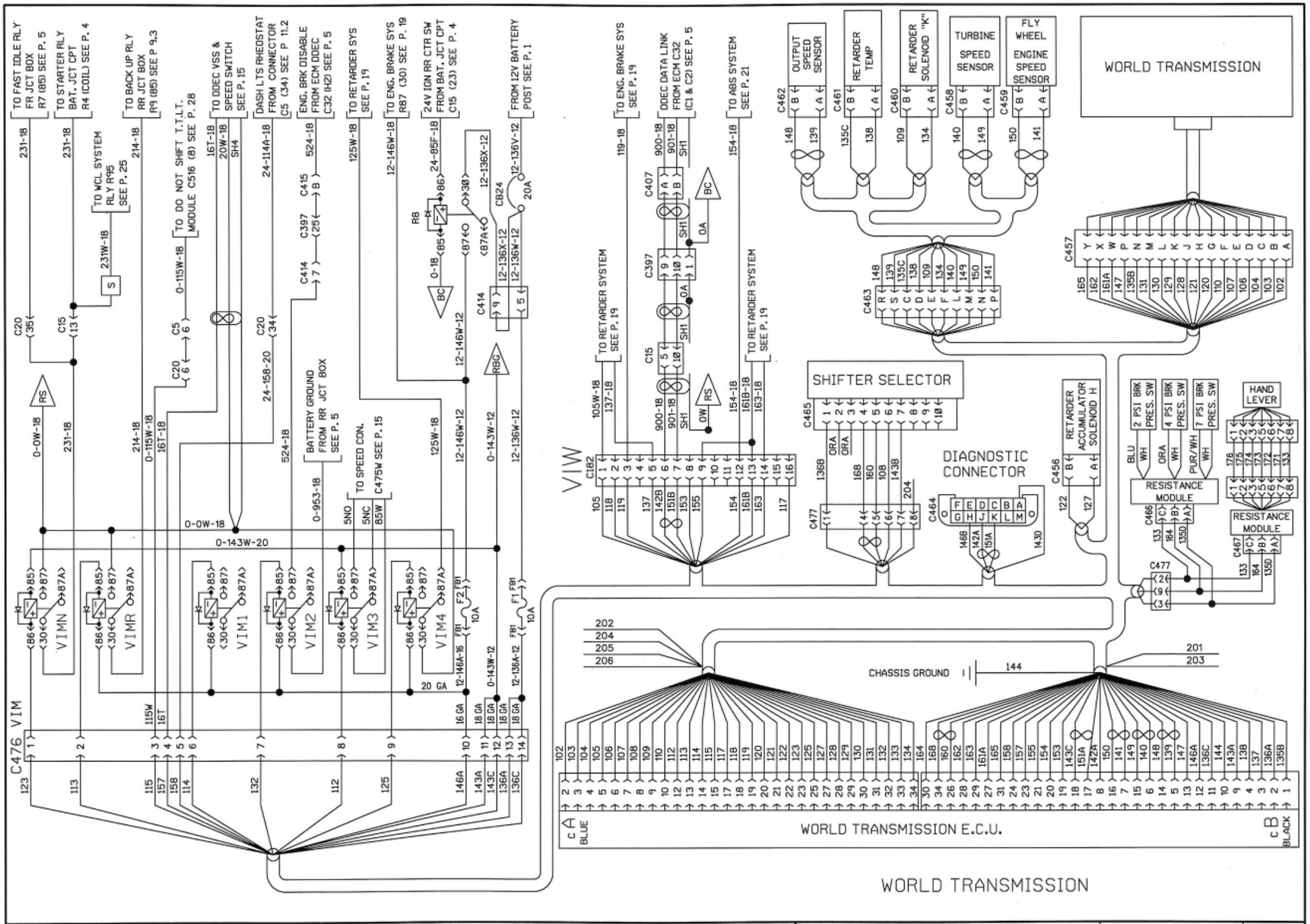

PREVOST	WIRING DIAGRAM	NO: D060882	PAGE: 6	REVISION 00

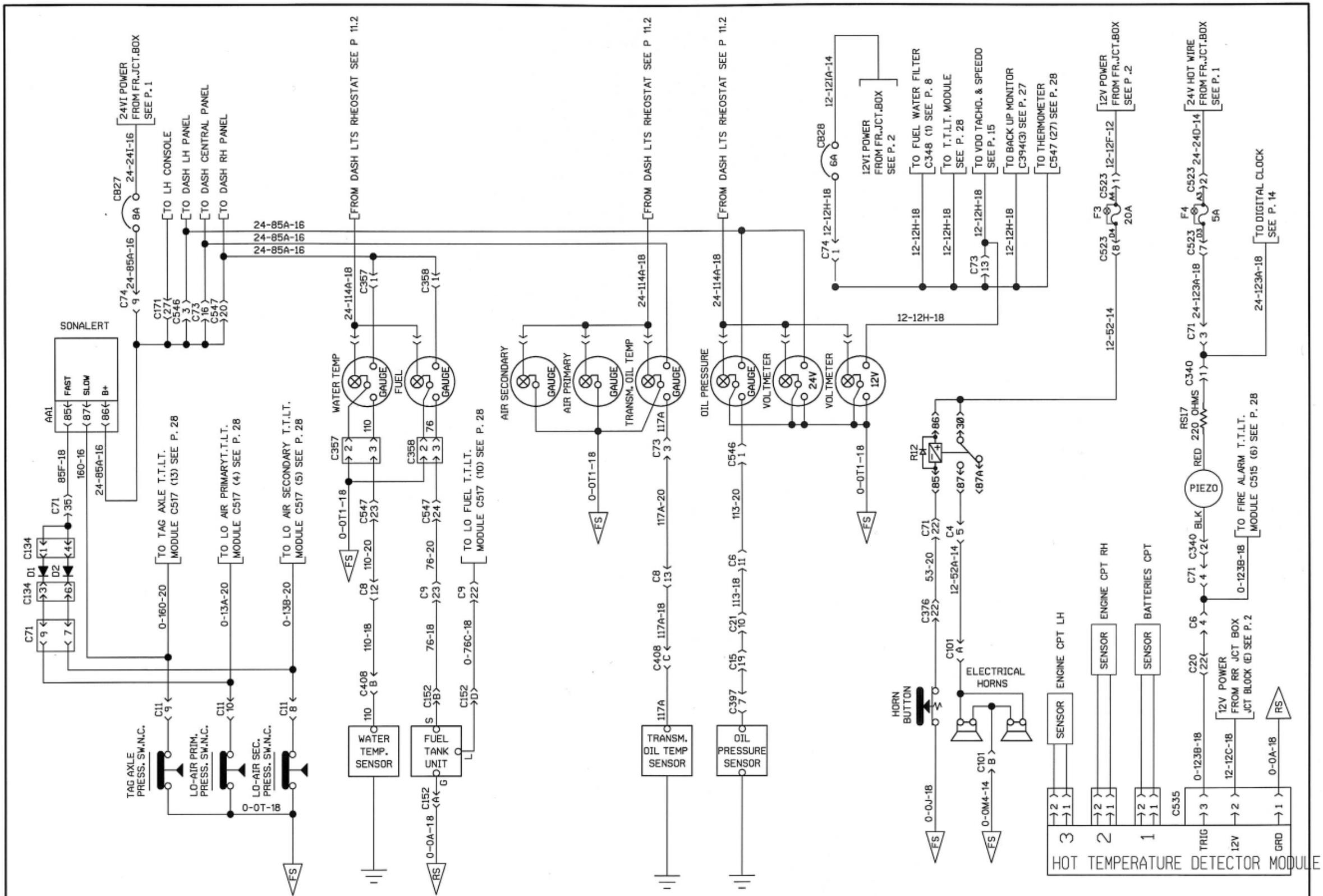

ALARM AND SIGNAL

PREVOST	WIRING DIAGRAM	NO: D060882	PAGE: 7	REVISION 01

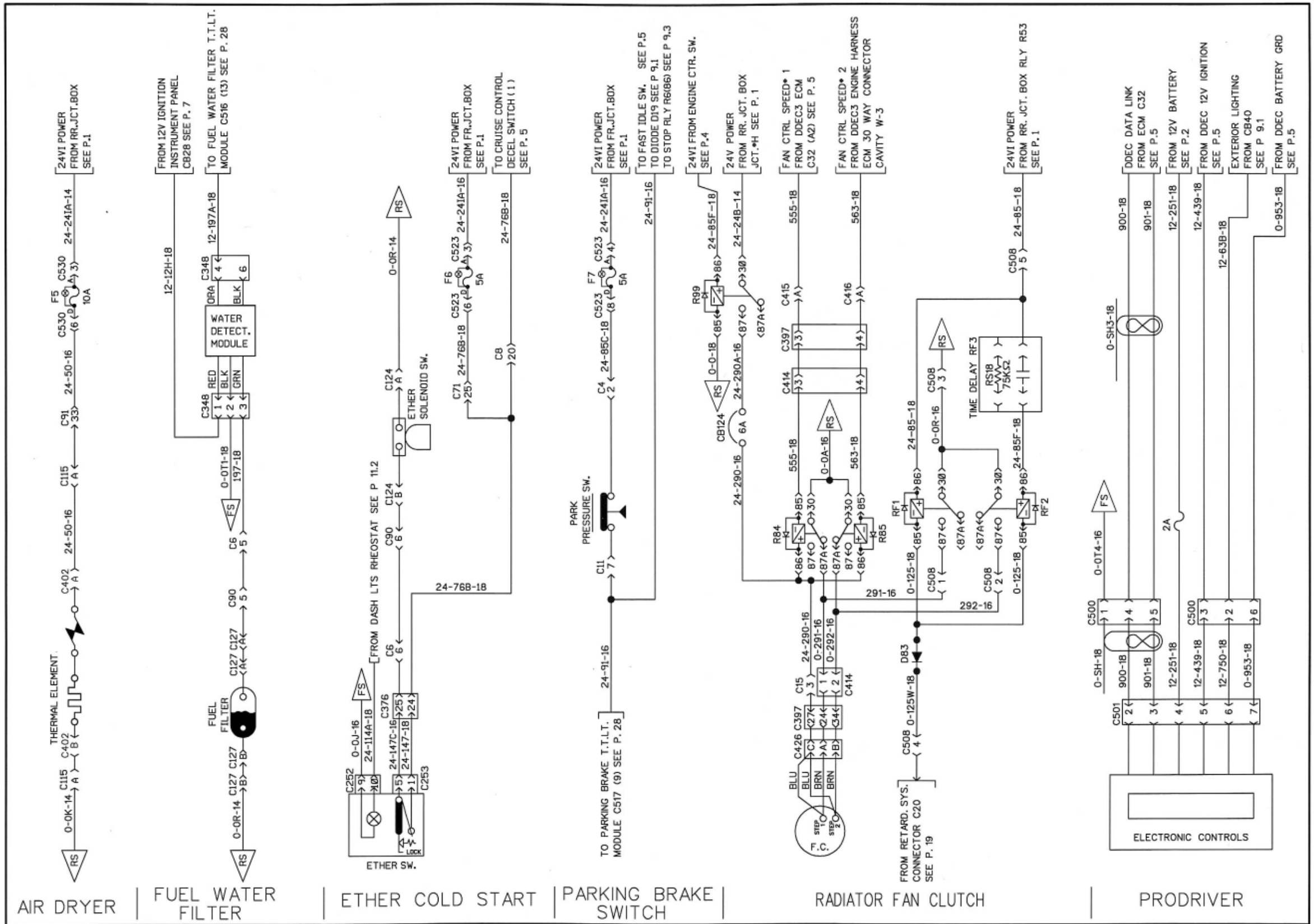

PREVOST	WIRING DIAGRAM	NO: D060882	PAGE: 8	REVISION 01

PREVOST

WIRING DIAGRAM

AIR DRYER

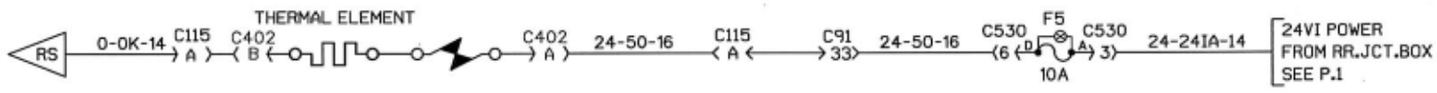

FUEL WATER FILTER

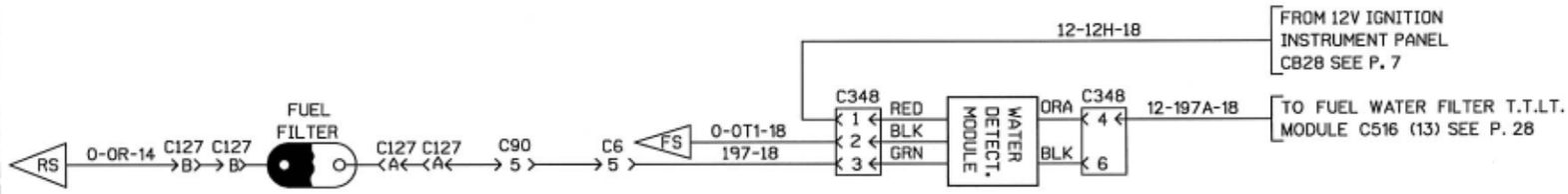

ETHER COLD START

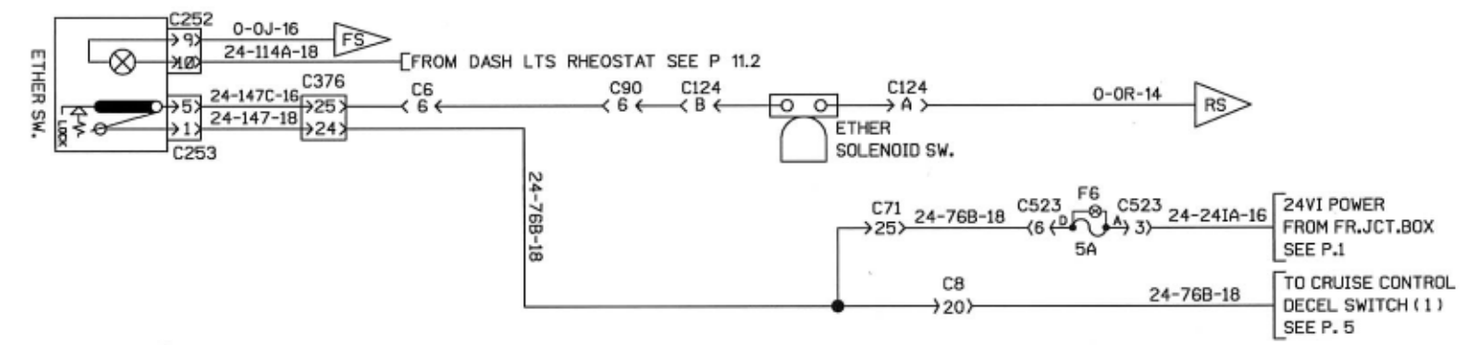

PARKING BRAKE SWITCH

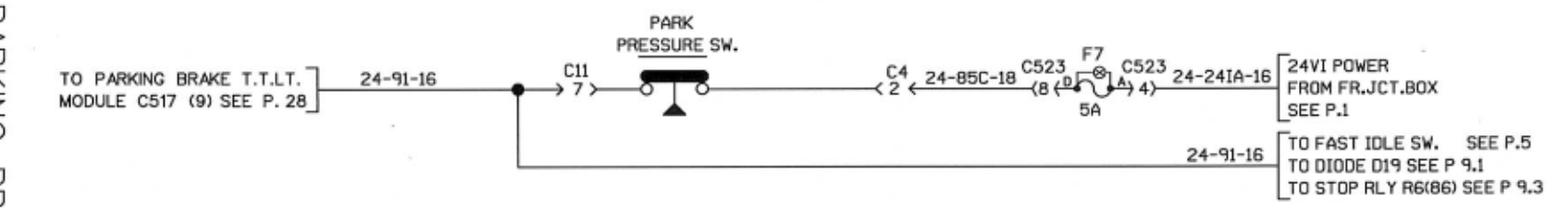

RADIATOR FAN CLUTCH

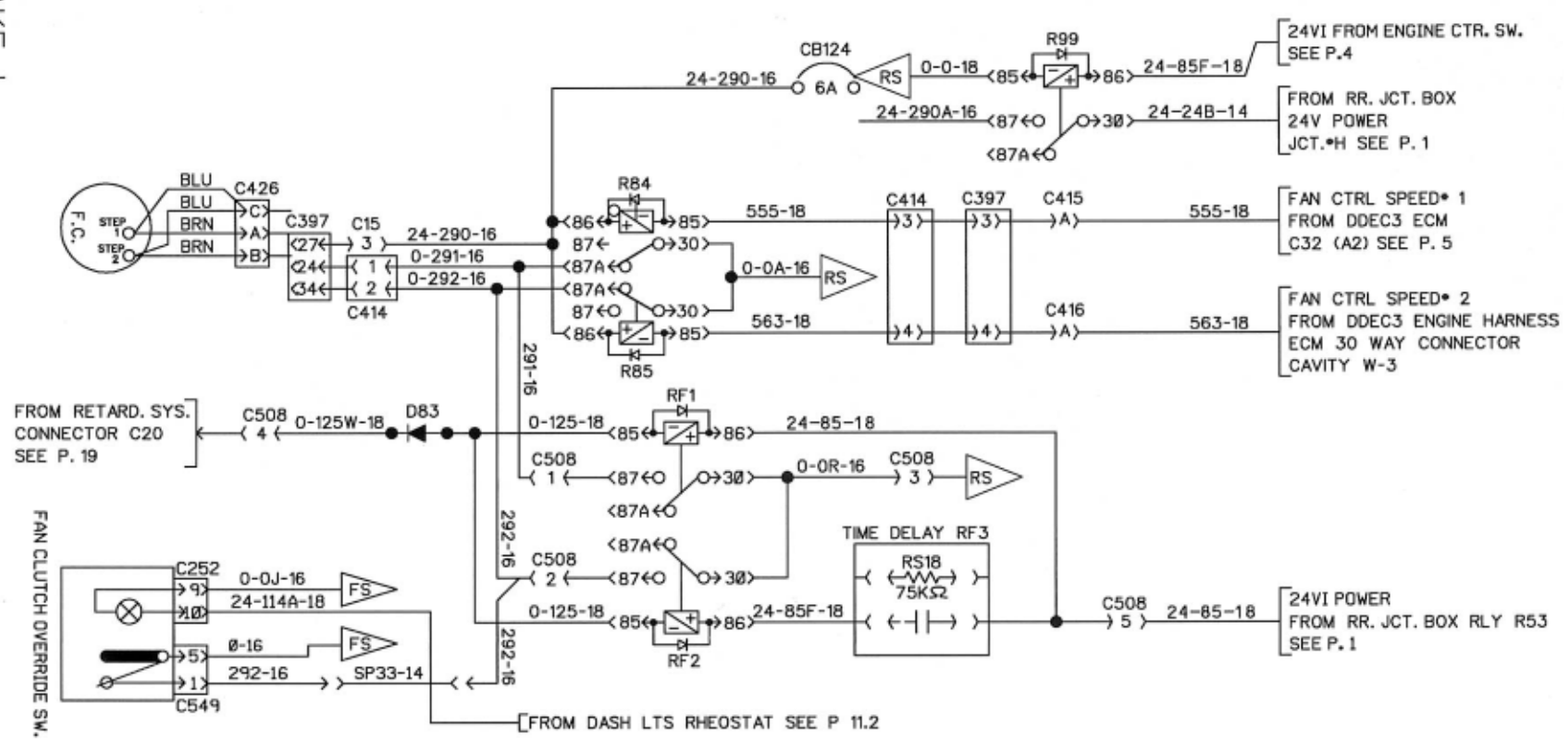

PRODRIVER

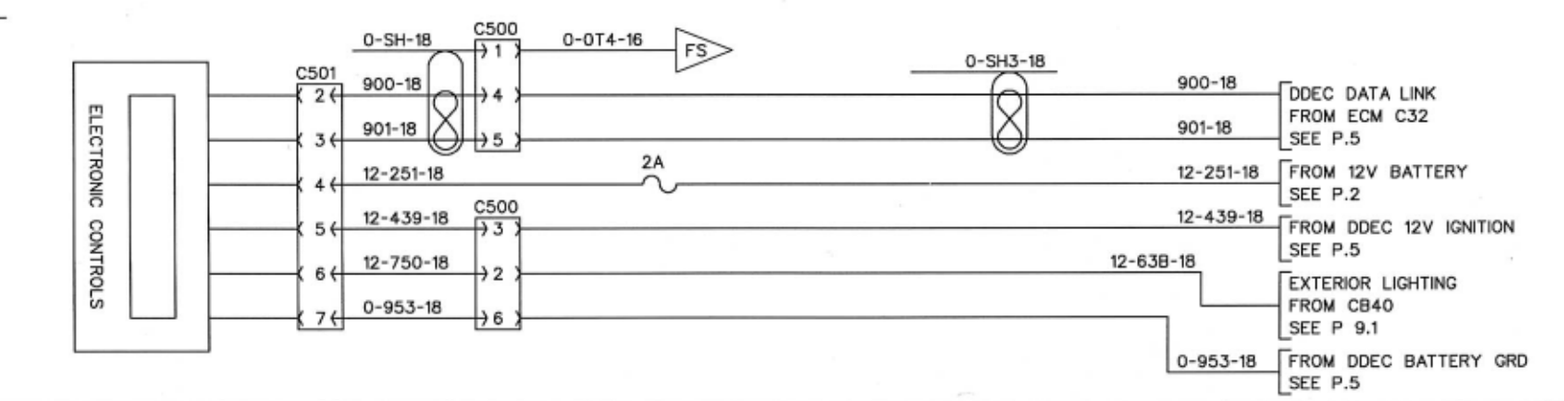

NO: D060882

PAGE: 8sp1

REVISION 01

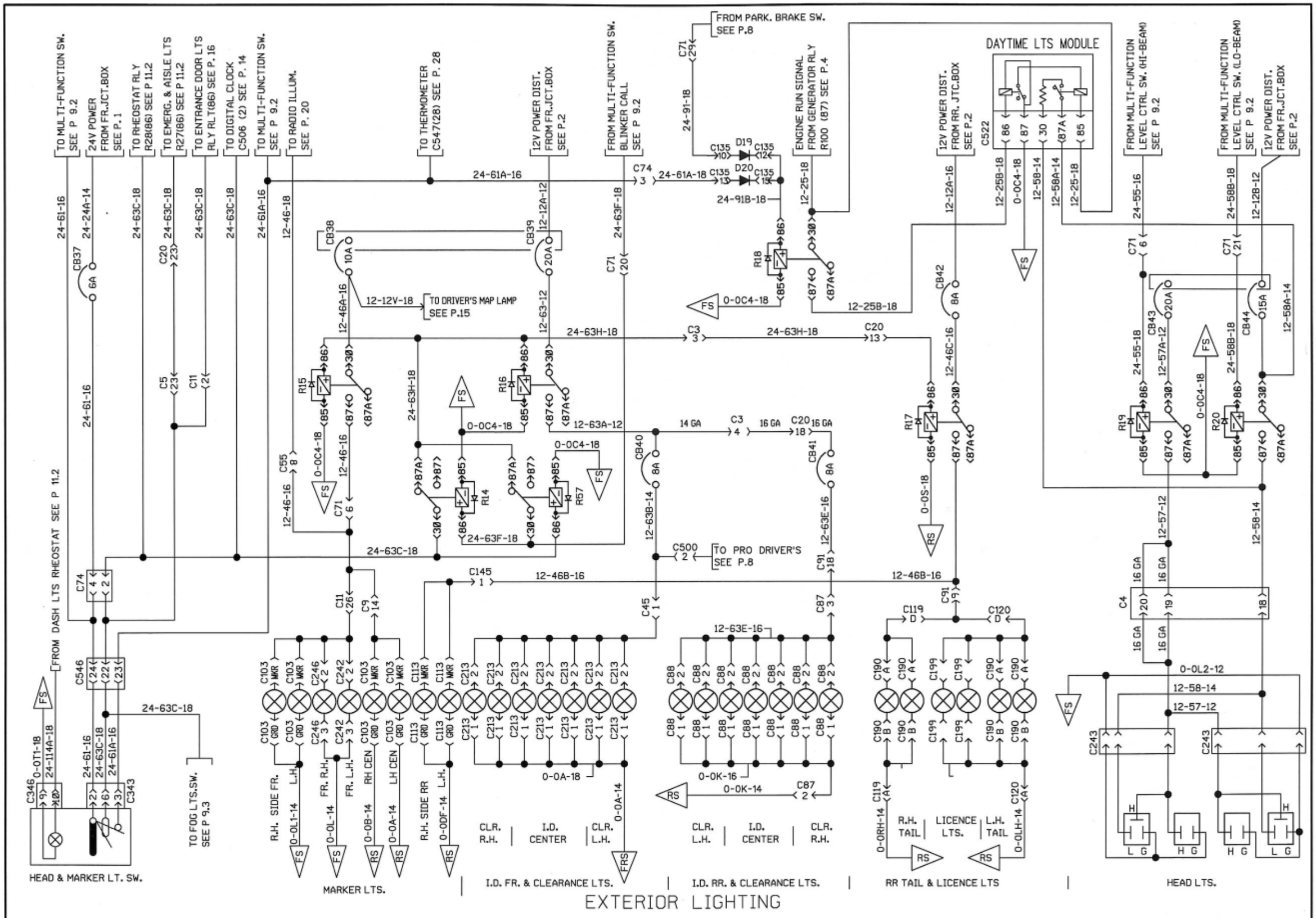

PREVOST	WIRING DIAGRAM	NO: D060882	PAGE: 9.1	REVISION 00

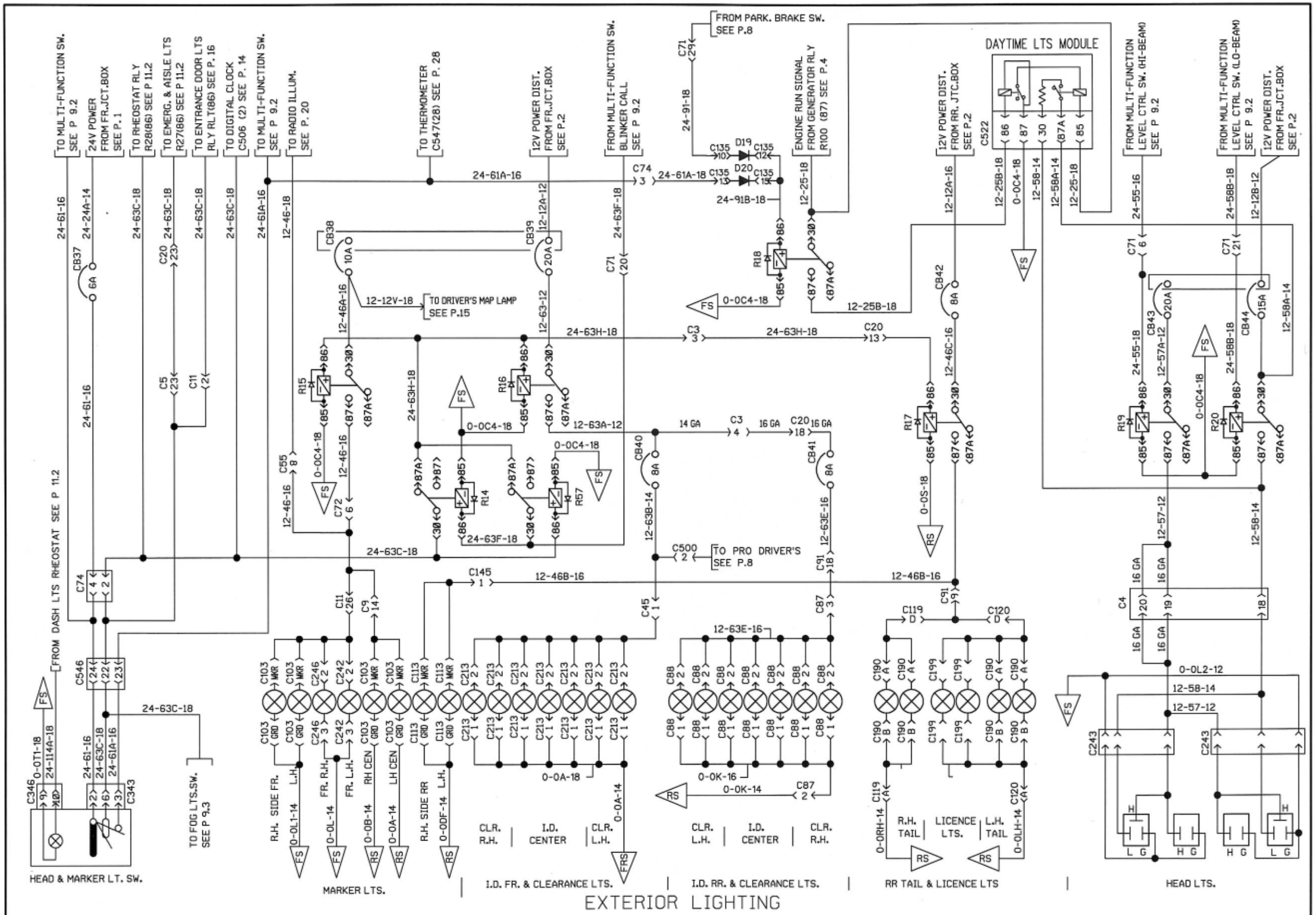

PREVOST	WIRING DIAGRAM	NO: D060882	PAGE: 9.1	REVISION 03

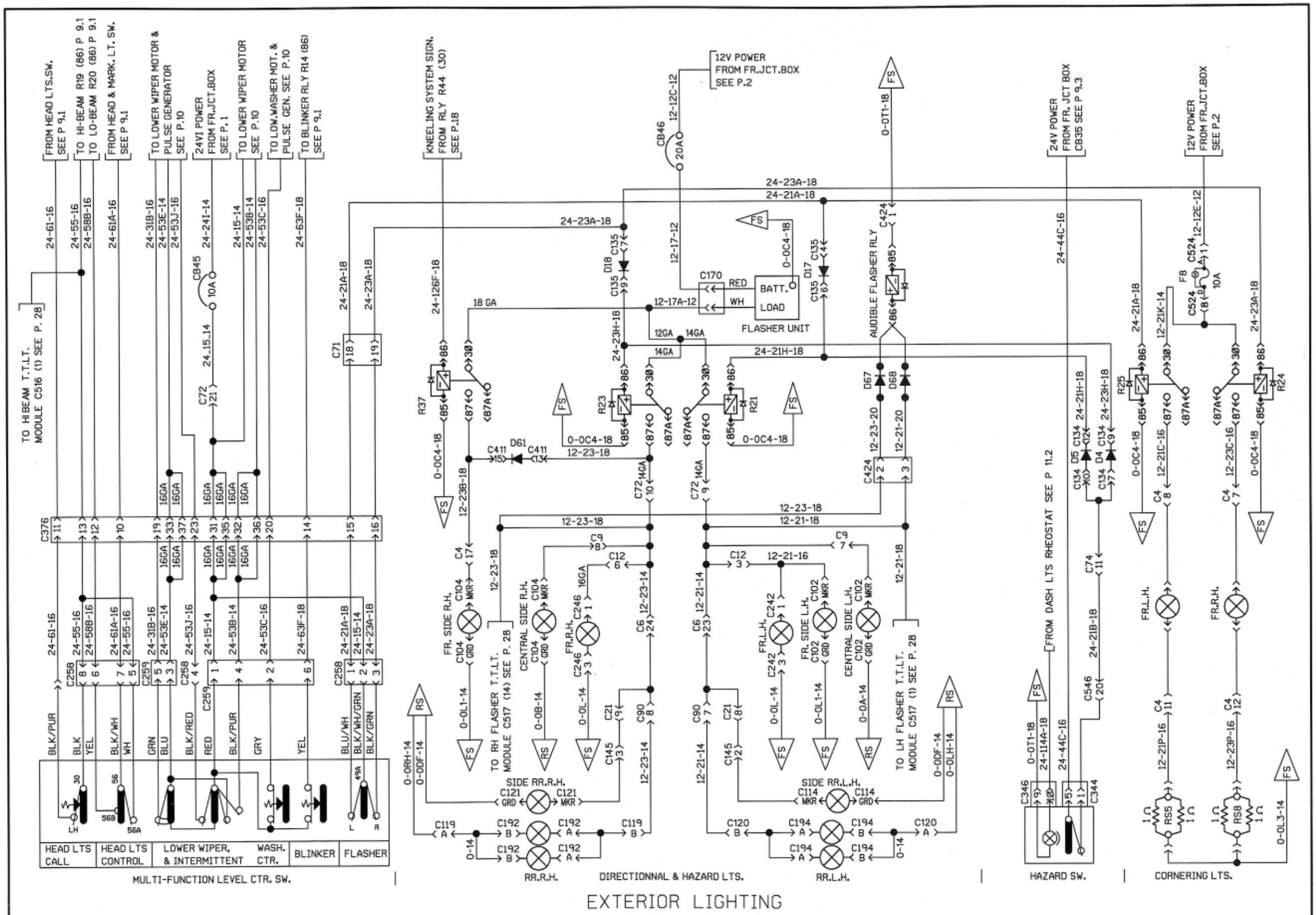

EXTERIOR LIGHTING

PREVOST	WIRING DIAGRAM	NO: D060882	PAGE: 9.2	REVISION 00

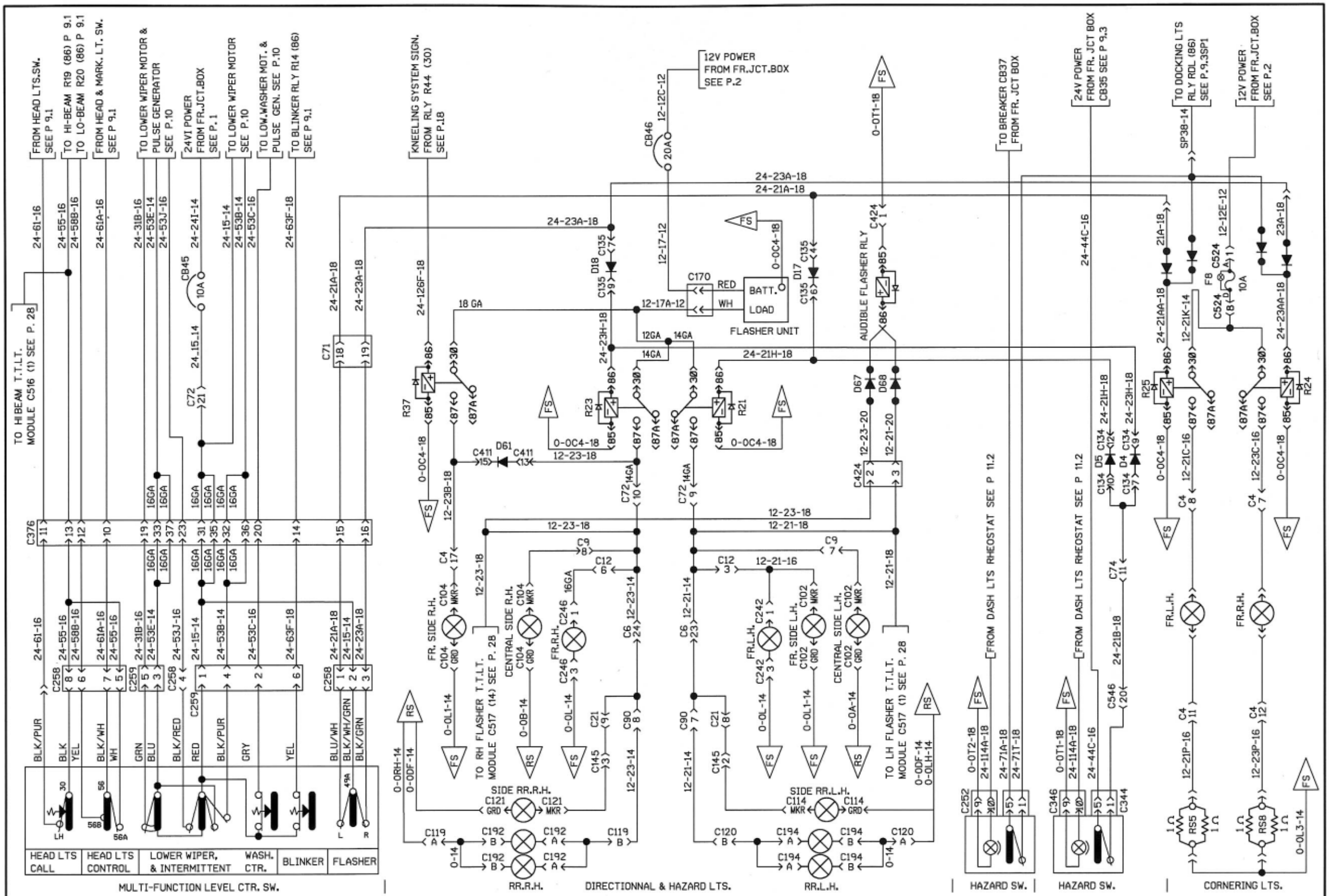

EXTERIOR LIGHTING

V1844,V1846

PREVOST	WIRING DIAGRAM	NO: D060882	PAGE: 9.2sp1	REVISION 00

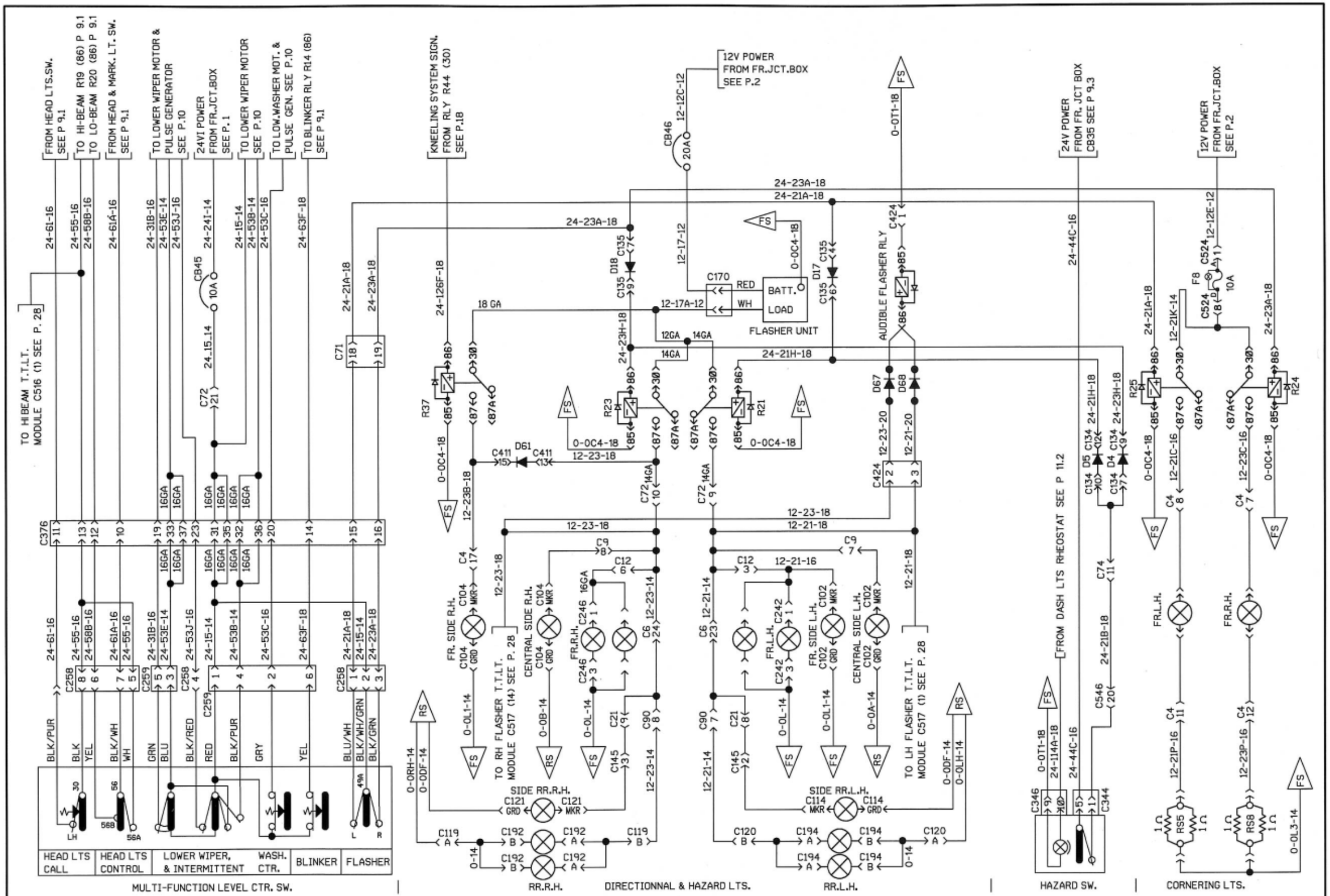

EXTERIOR LIGHTING

GREYHOUND

PREVOST	WIRING DIAGRAM	NO: D060882	PAGE: 9.2sp2	REVISION 00

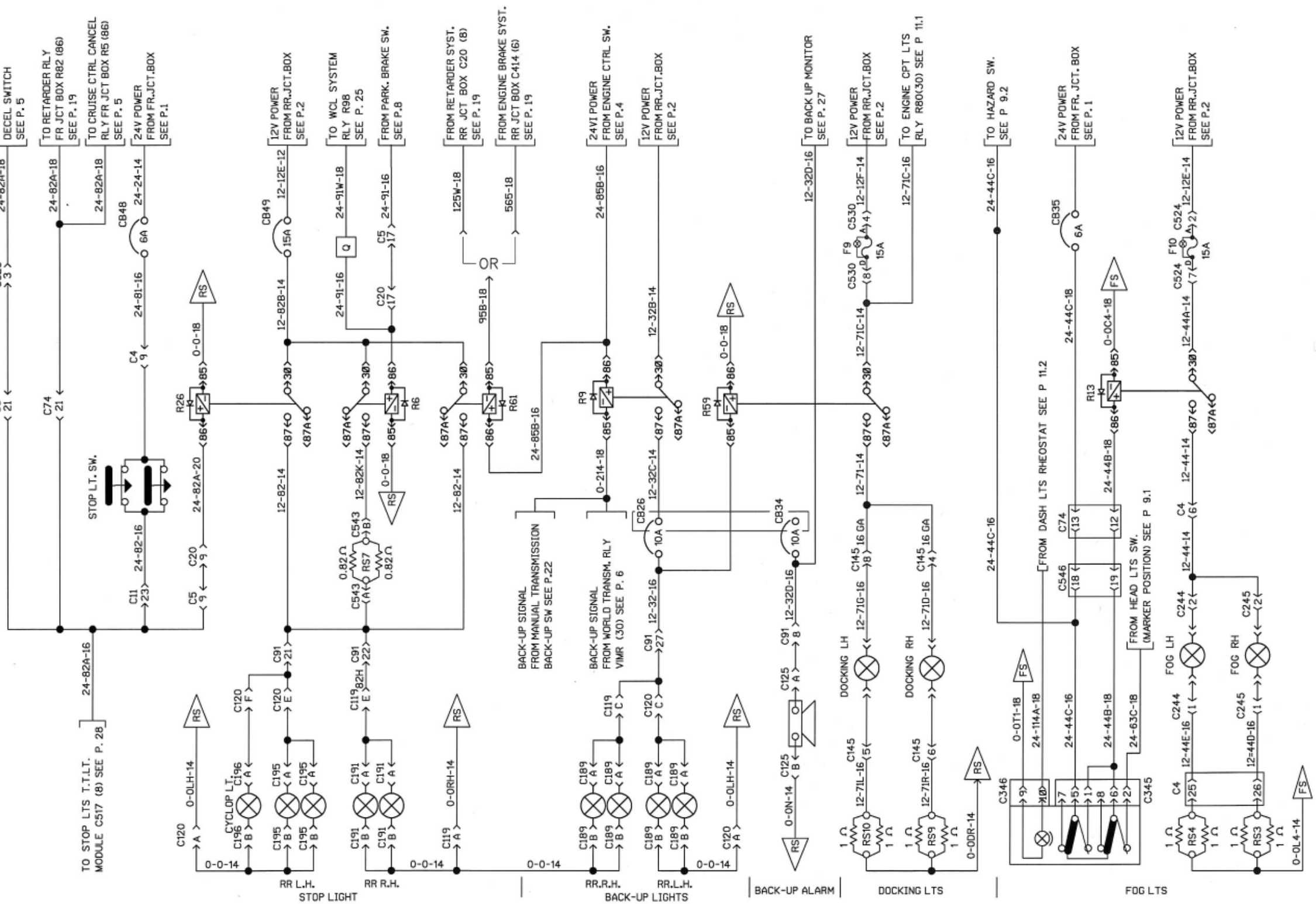

EXTERIOR LIGHTING

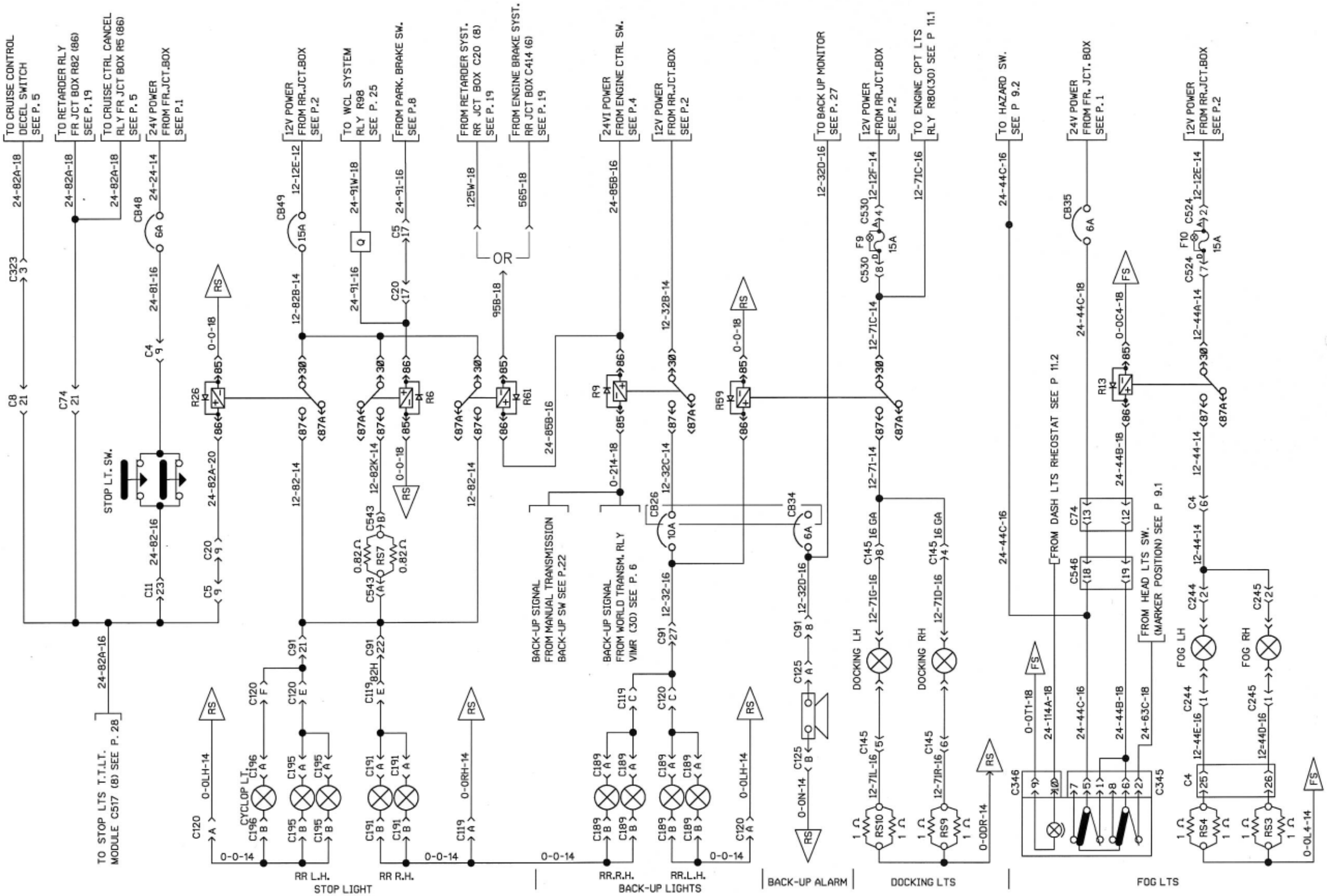

EXTERIOR LIGHTING

PREVOST	WIRING DIAGRAM	NO: D060882	PAGE: 9.3	REVISION 03

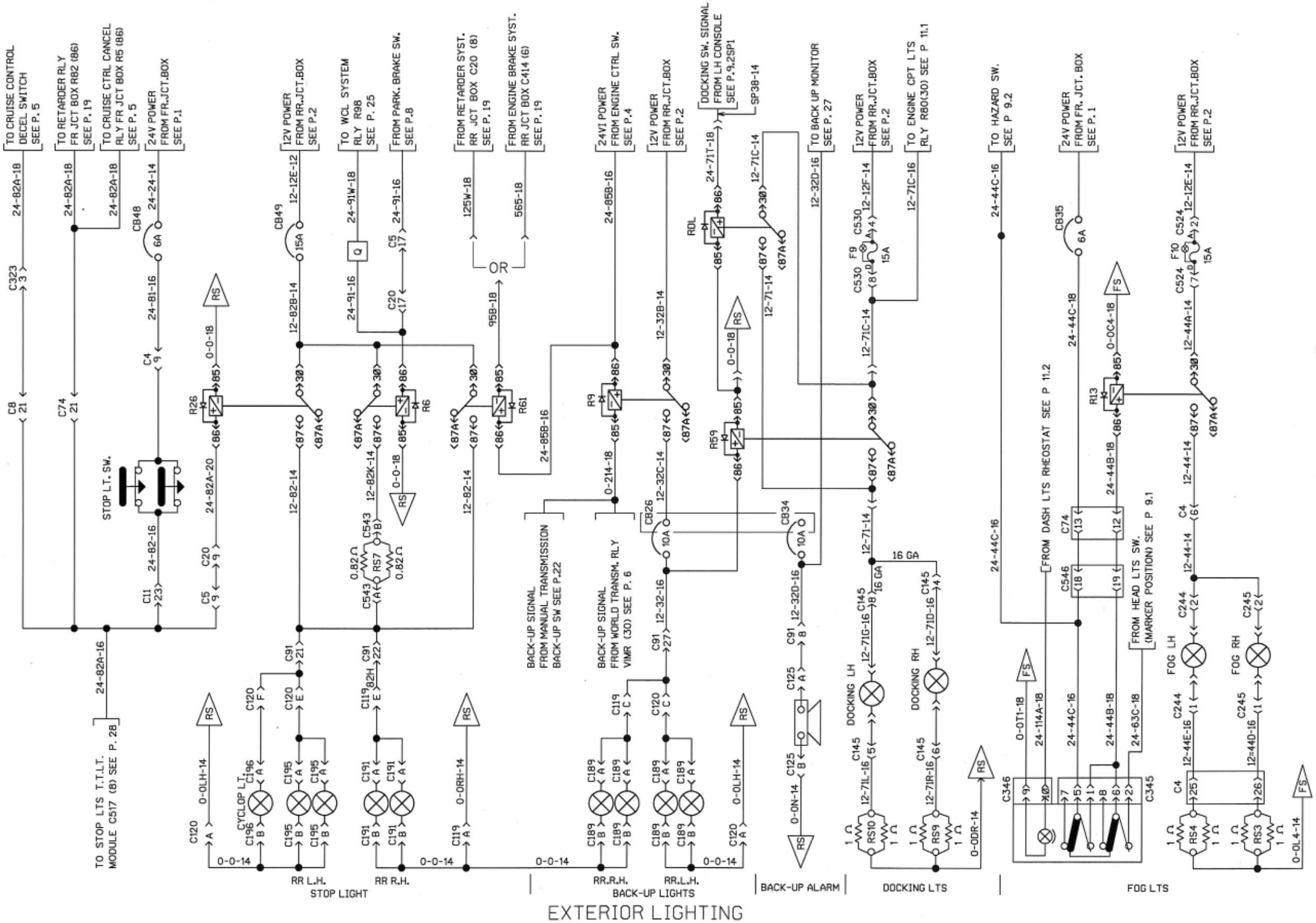

EXTERIOR LIGHTING

V1844,V1846

PREVOST	WIRING DIAGRAM	NO: D060882	PAGE: 9.3sp1	REVISION 00

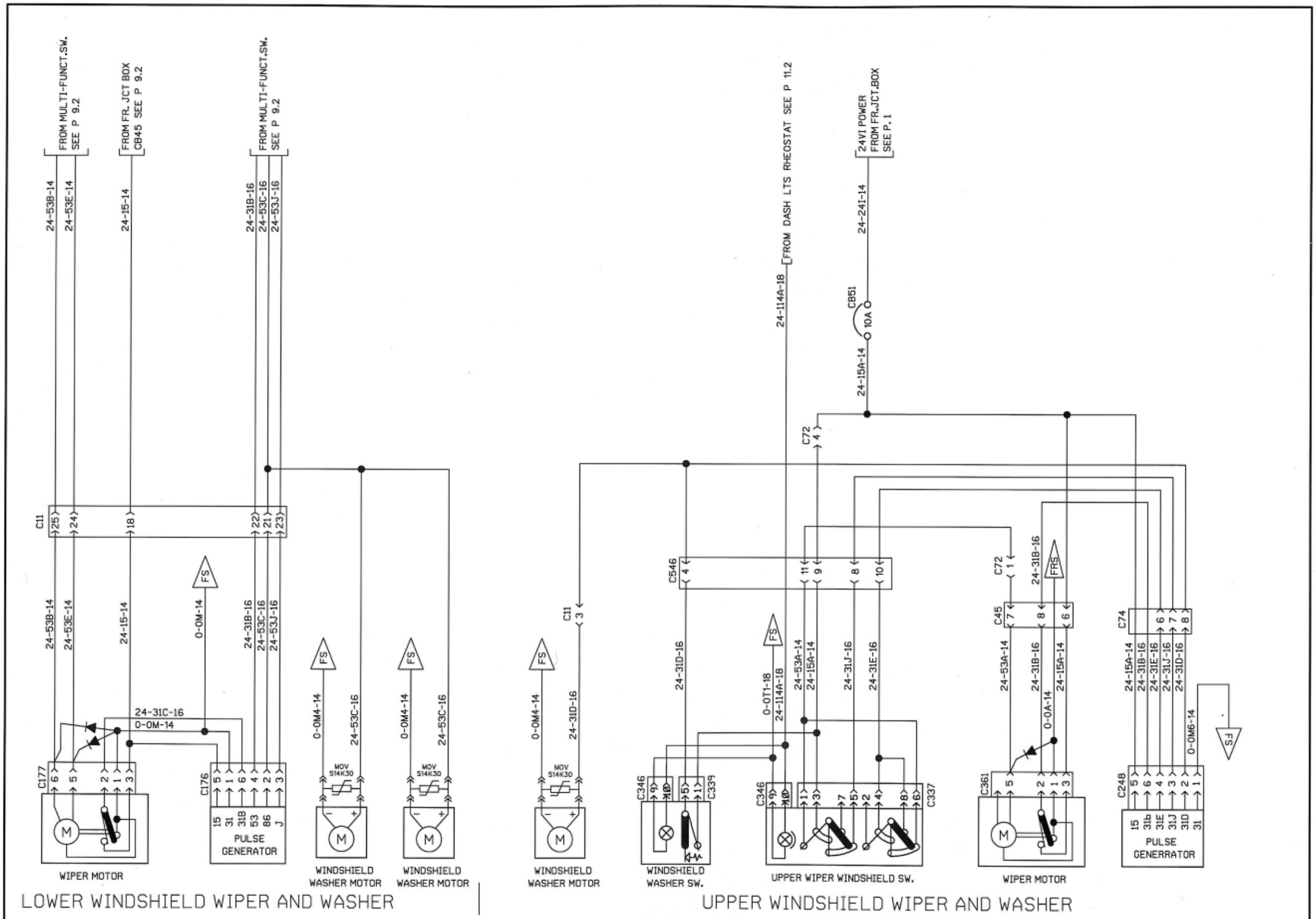

PREVOST	WIRING DIAGRAM	NO: D060882	PAGE: 10	REVISION 00

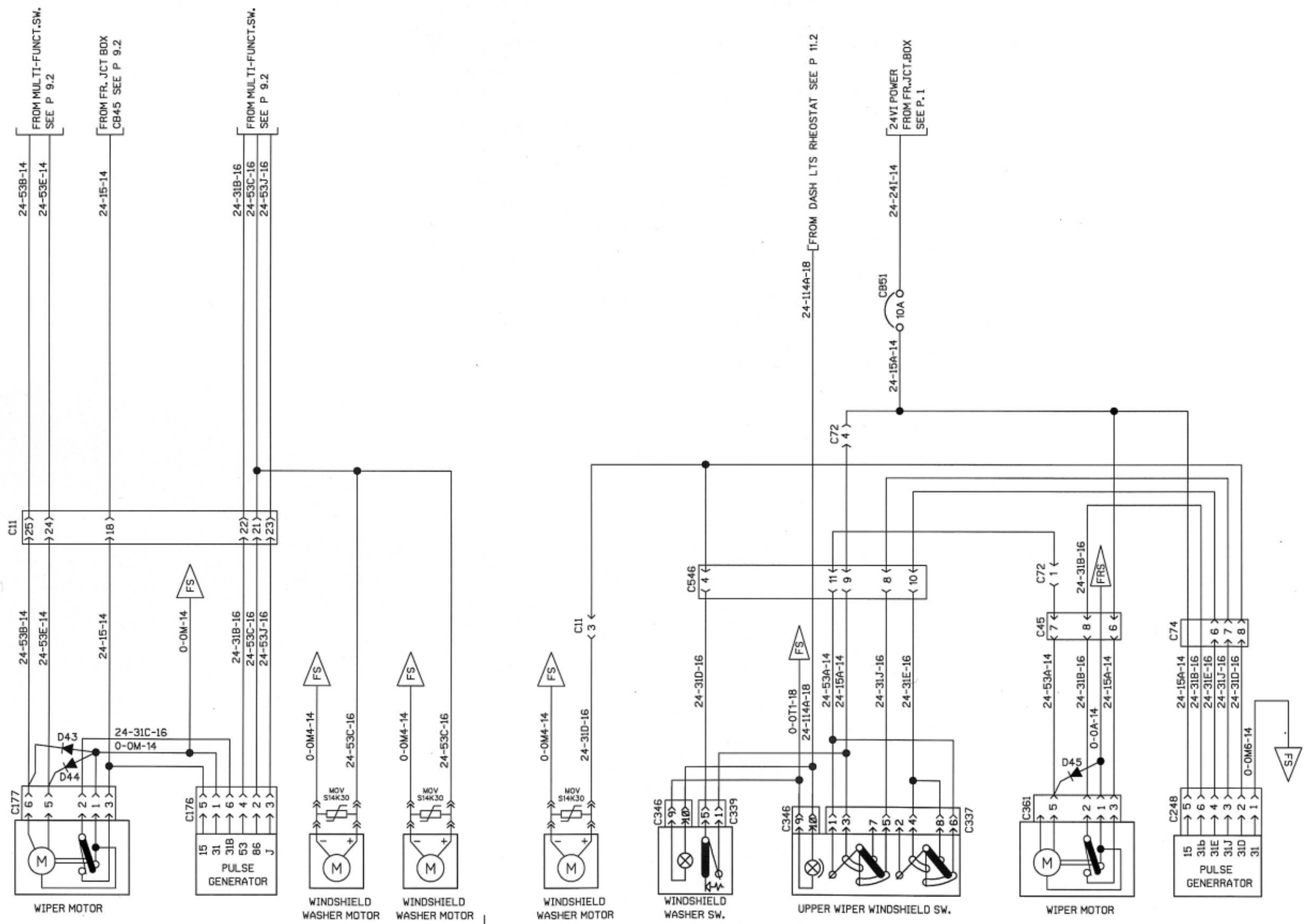

PREVOST	WIRING DIAGRAM	NO: D060882	PAGE: 10	REVISION 03

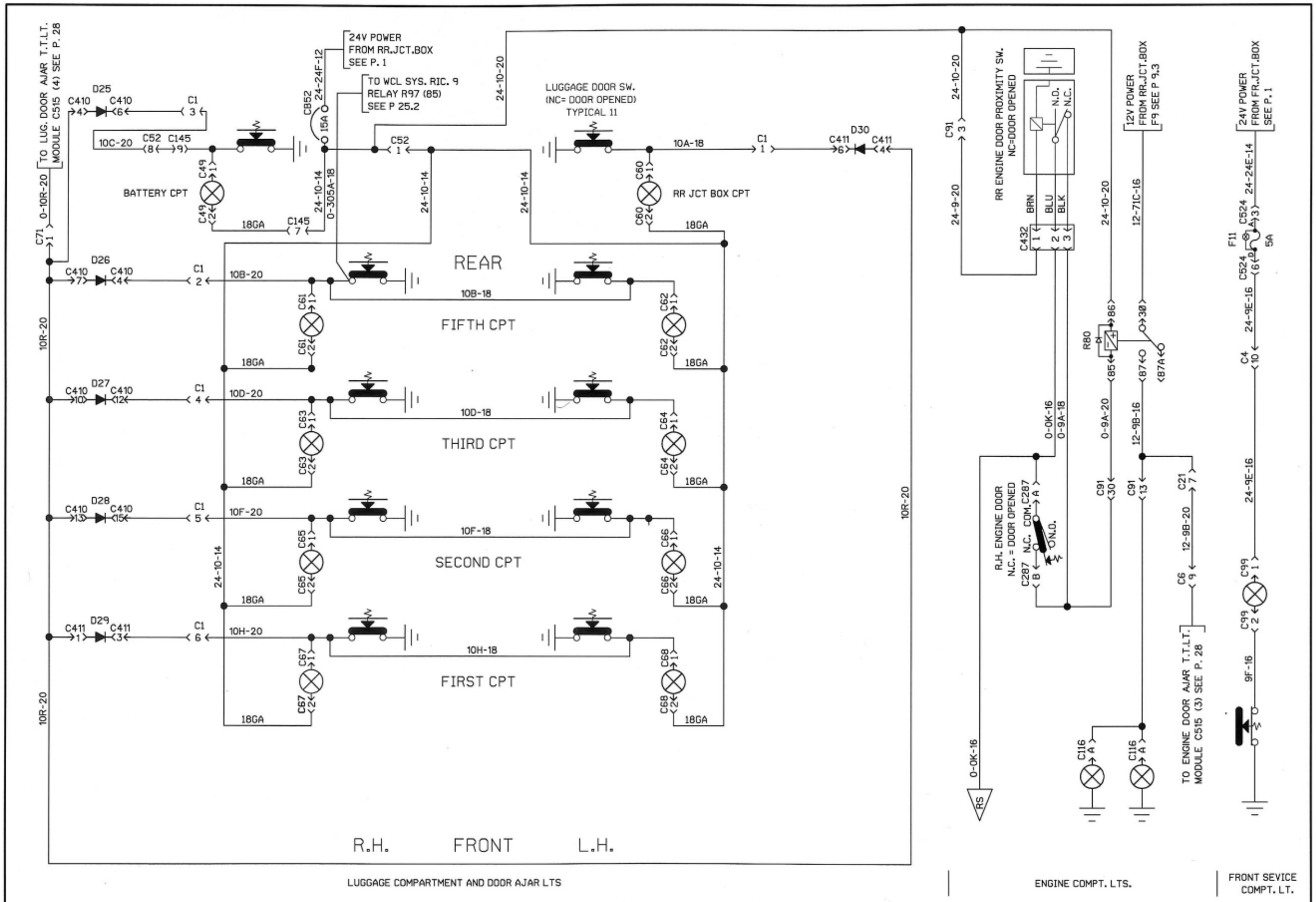

INTERIOR LIGHTING

PREVOST	WIRING DIAGRAM	NO: D060882	PAGE: 11.1	REVISION 01

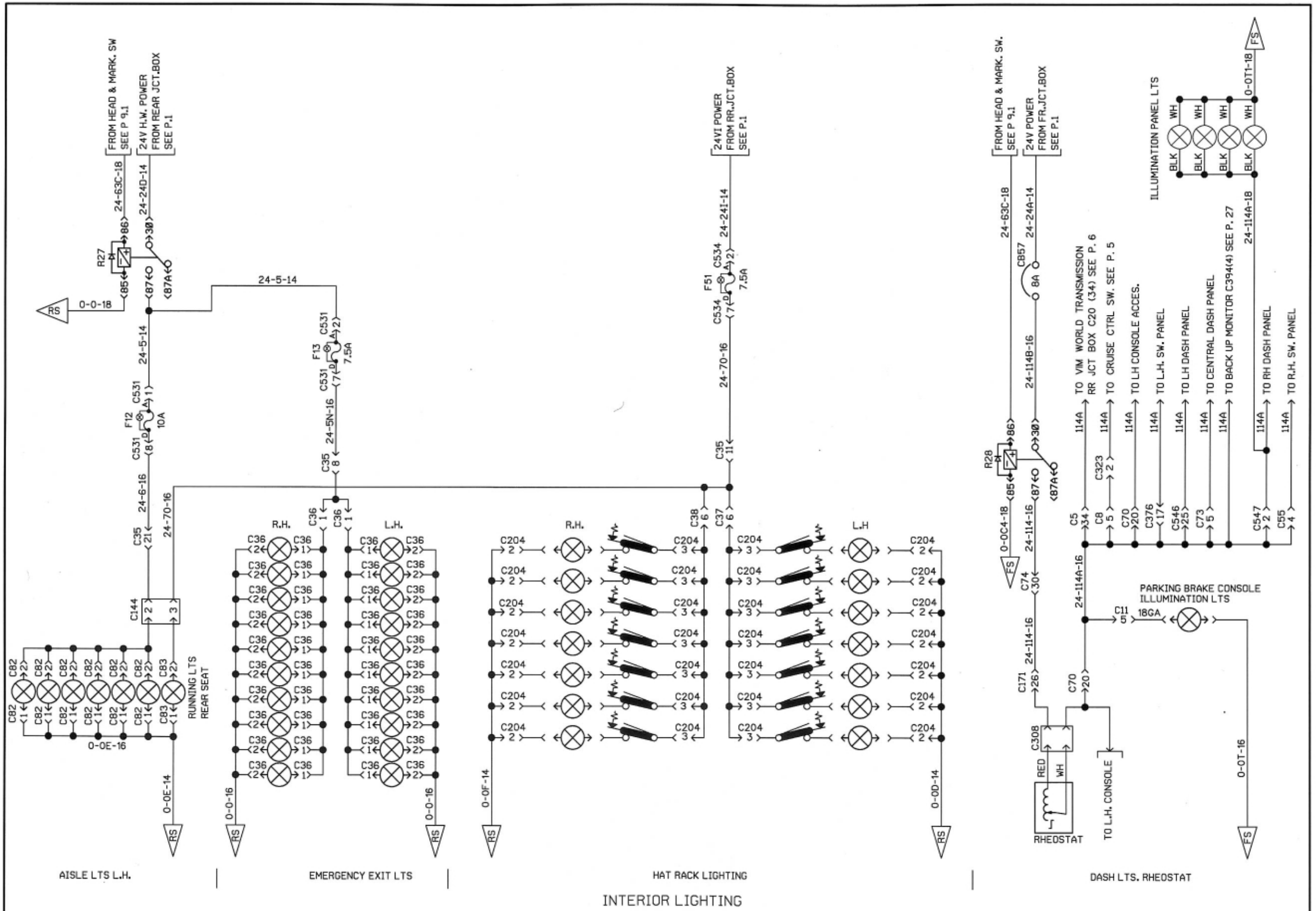

INTERIOR LIGHTING

PREVOST	WIRING DIAGRAM	NO: D060882	PAGE: 11.2	REVISION 00

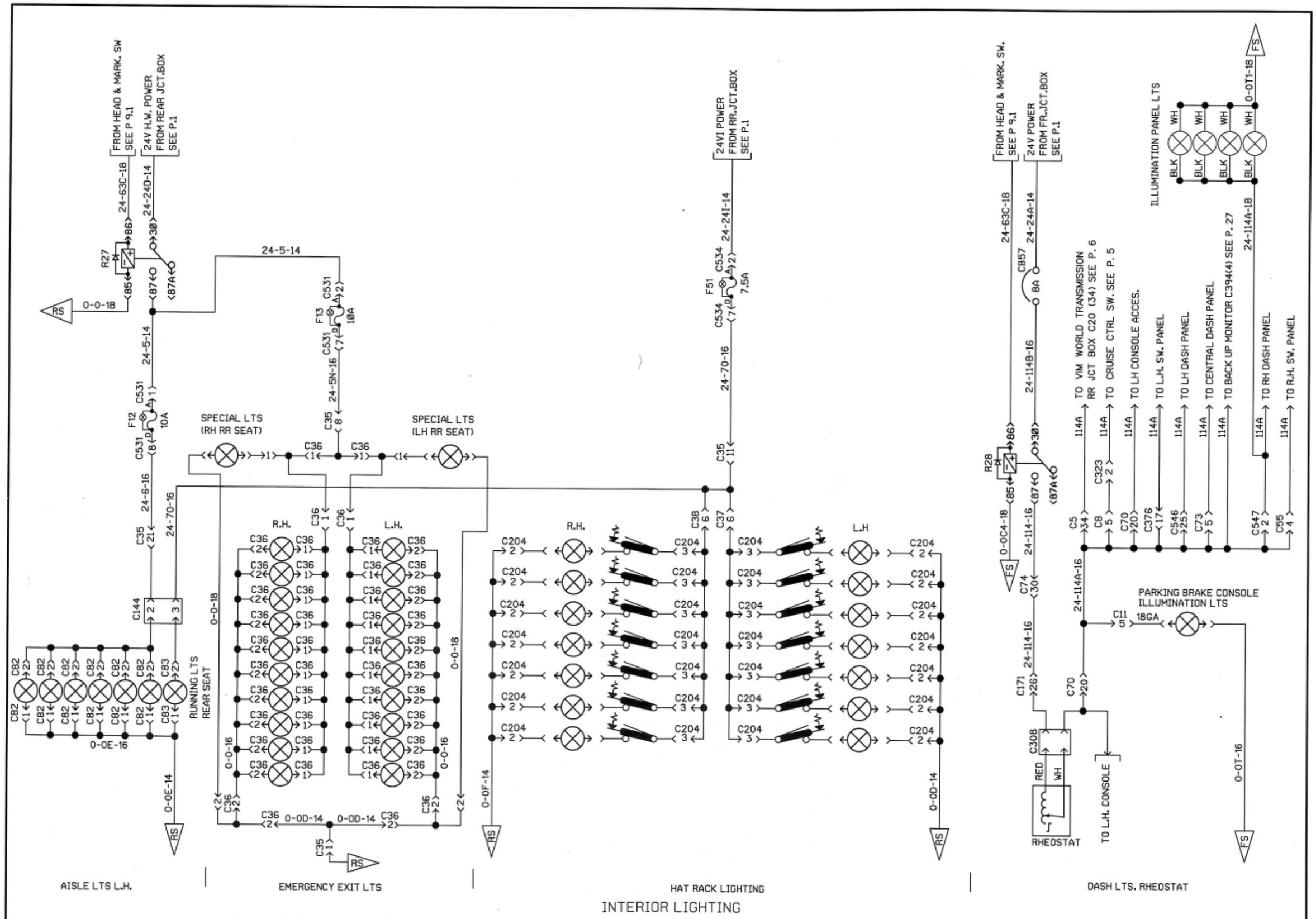

INTERIOR LIGHTING

PREVOST	WIRING DIAGRAM	NO: D060882	PAGE: 11.2SP1	REVISION 00

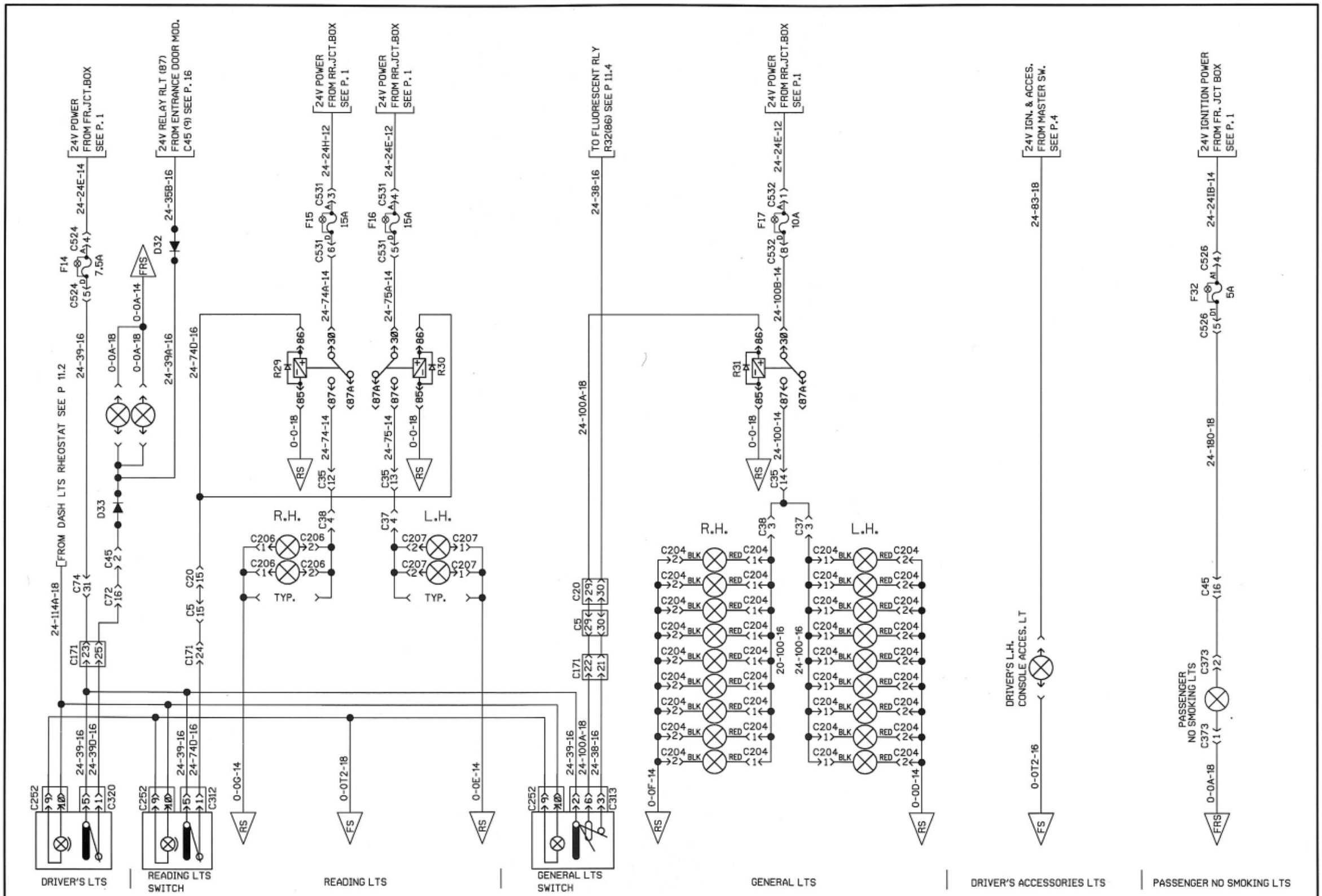

INTERIOR LIGHTING

PREVOST	WIRING DIAGRAM	NO: D060882	PAGE: 11.3	REVISION 00

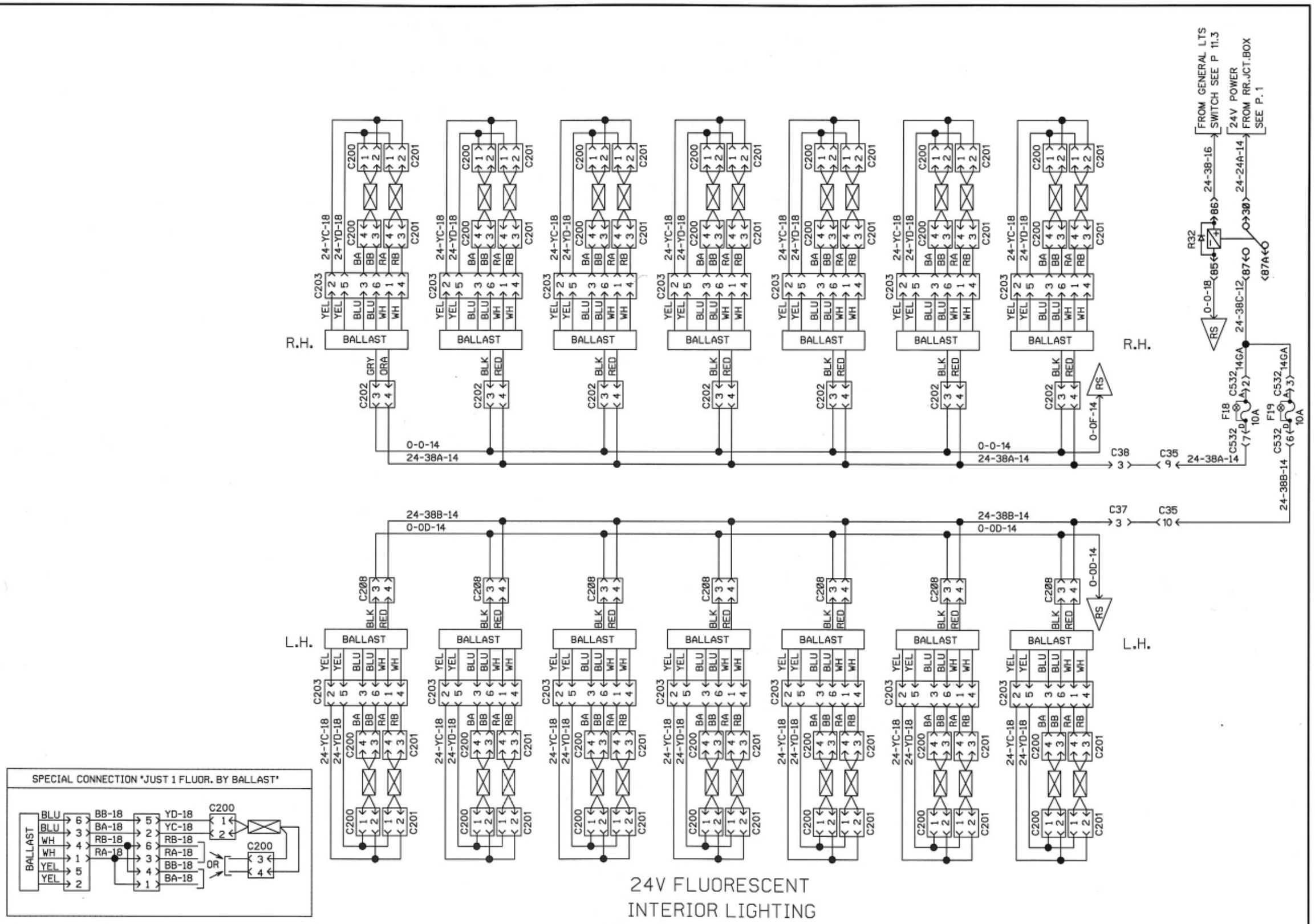

24V FLUORESCENT
INTERIOR LIGHTING

PREVOST	WIRING DIAGRAM	NO: D060882	PAGE: 11.4	REVISION 01

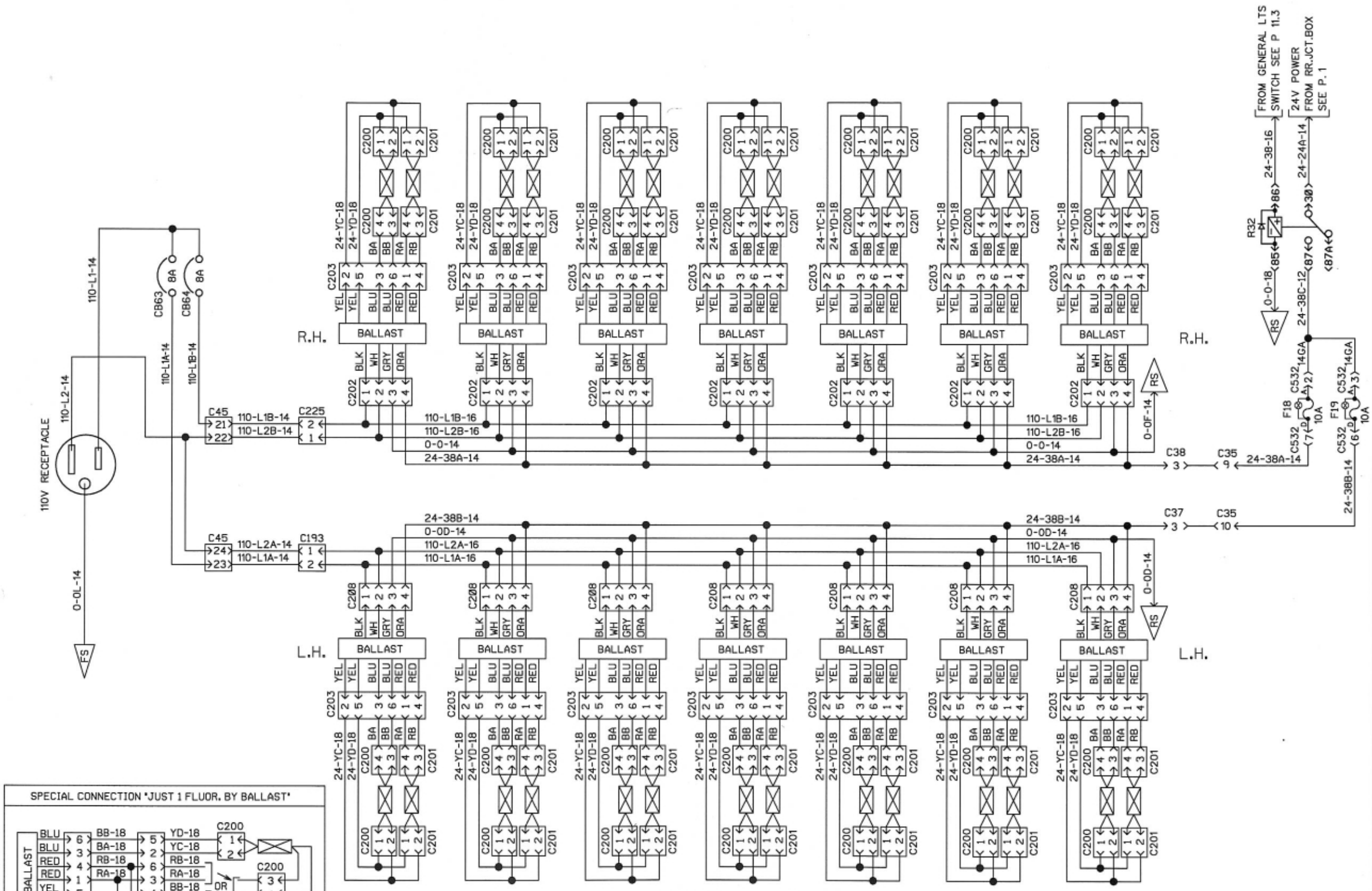

INTERIOR LIGHTING

PREVOST	WIRING DIAGRAM	NO: D060882	PAGE: 11.5	REVISION 01

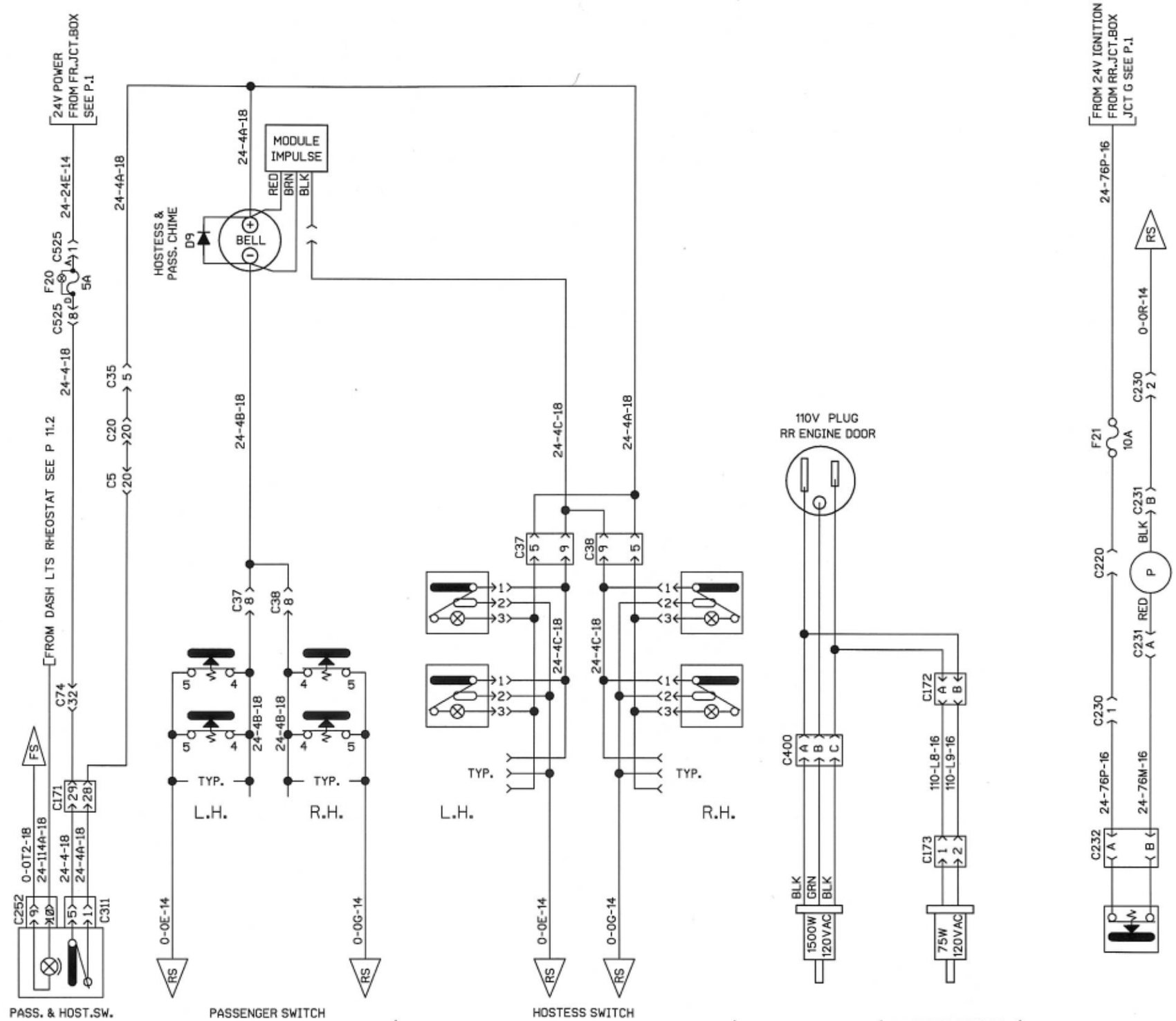

PREVOST	WIRING DIAGRAM	NO: D060882	PAGE: 12	REVISION 00

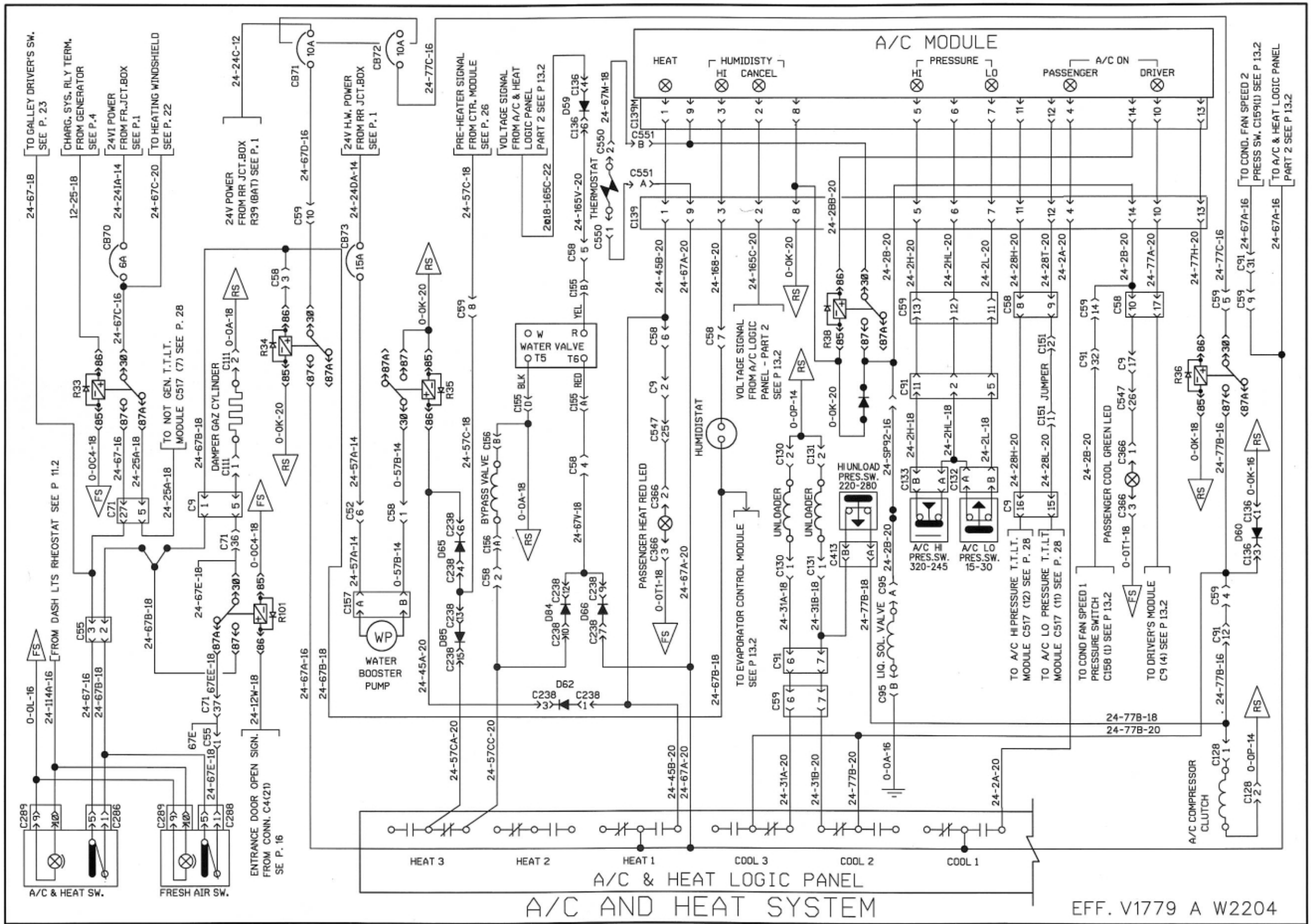

A/C AND HEAT SYSTEM

EFF. V1779 A W2204

PREVOST	WIRING DIAGRAM	NO: D060882	PAGE: 13.1	REVISION 13

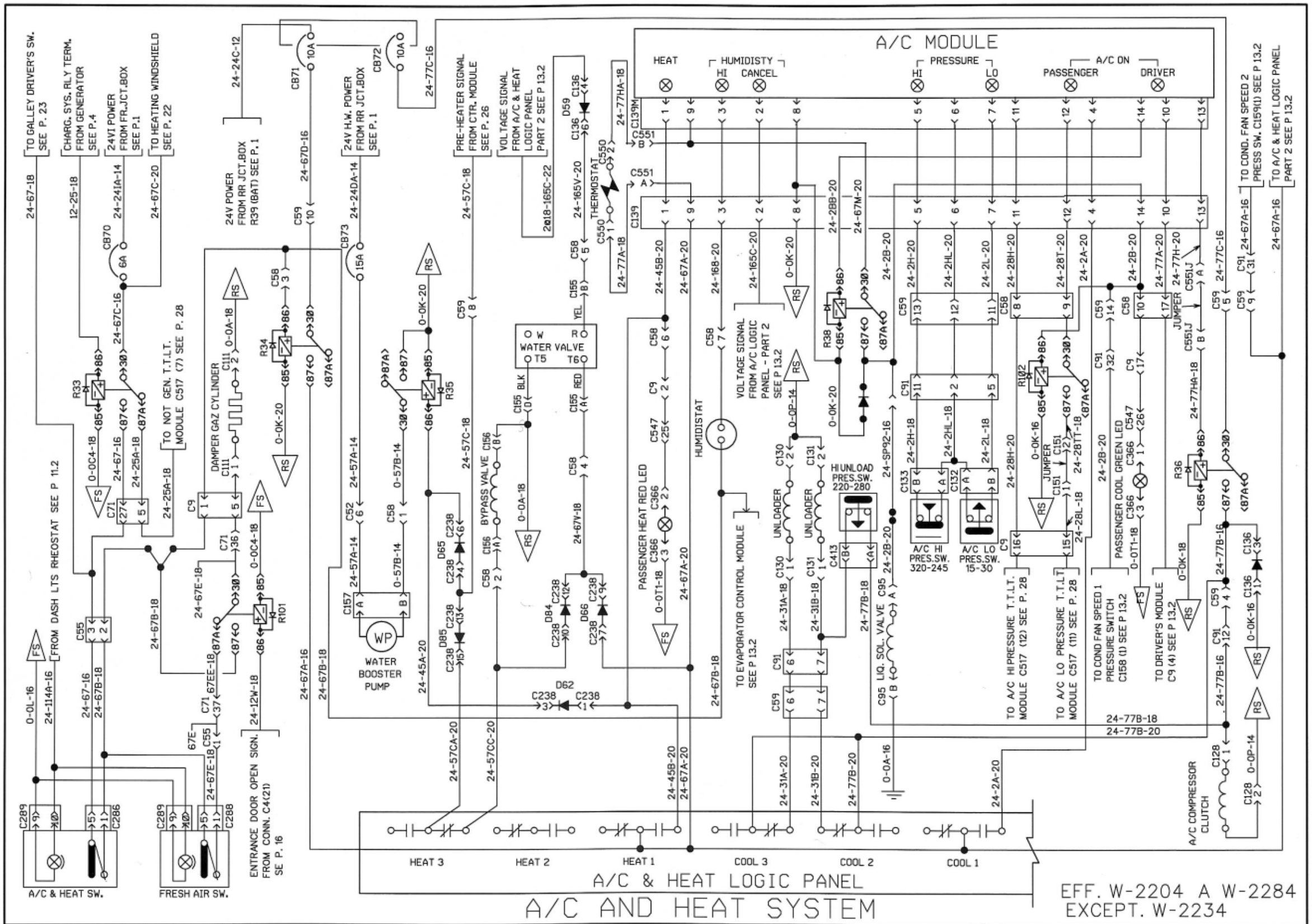

PREVOST	WIRING DIAGRAM	NO: D060882	PAGE: 13.1	REVISION 14

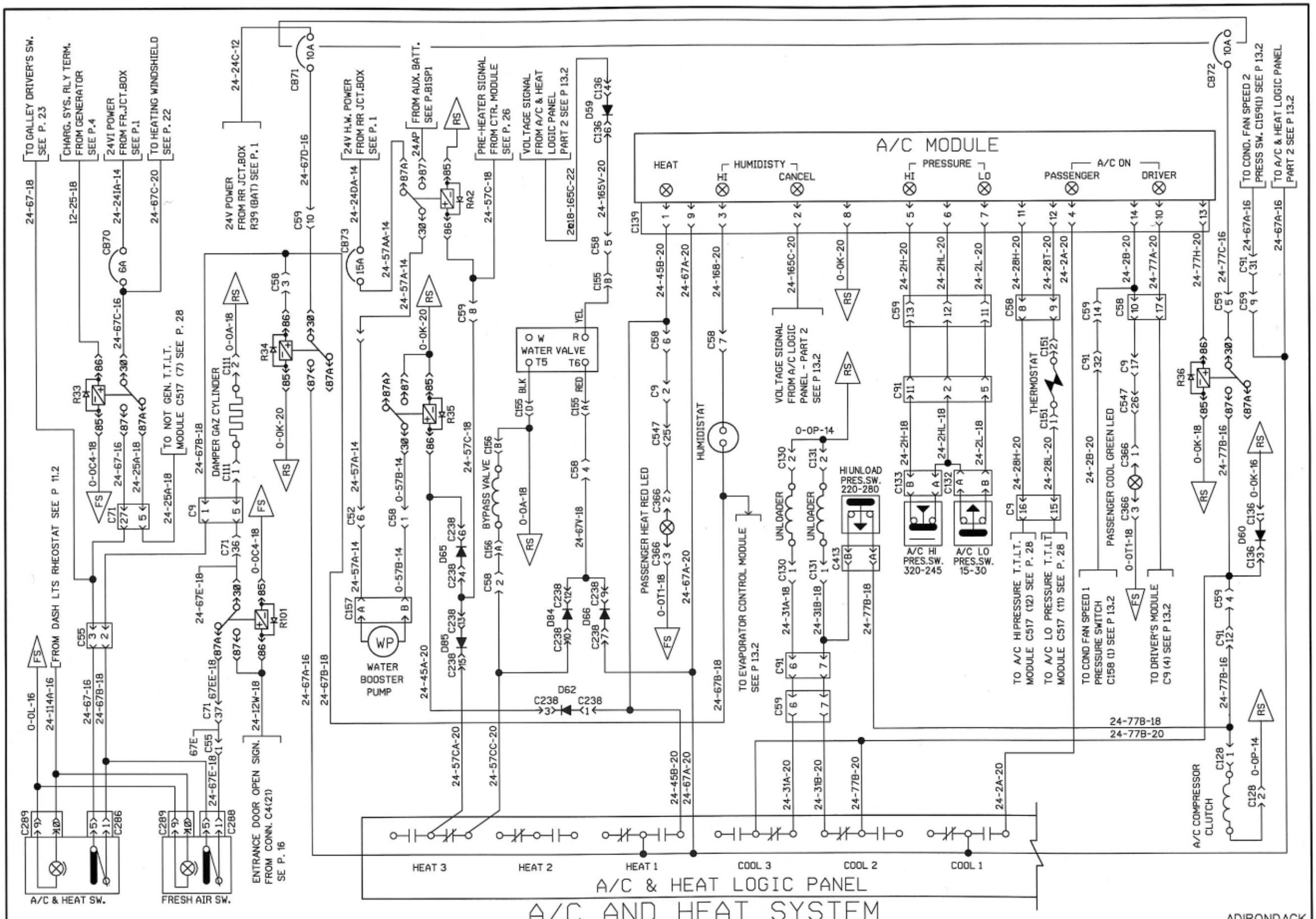

PREVOST	WIRING DIAGRAM	NO: D060882	PAGE: 13.1sp1	REVISION 00

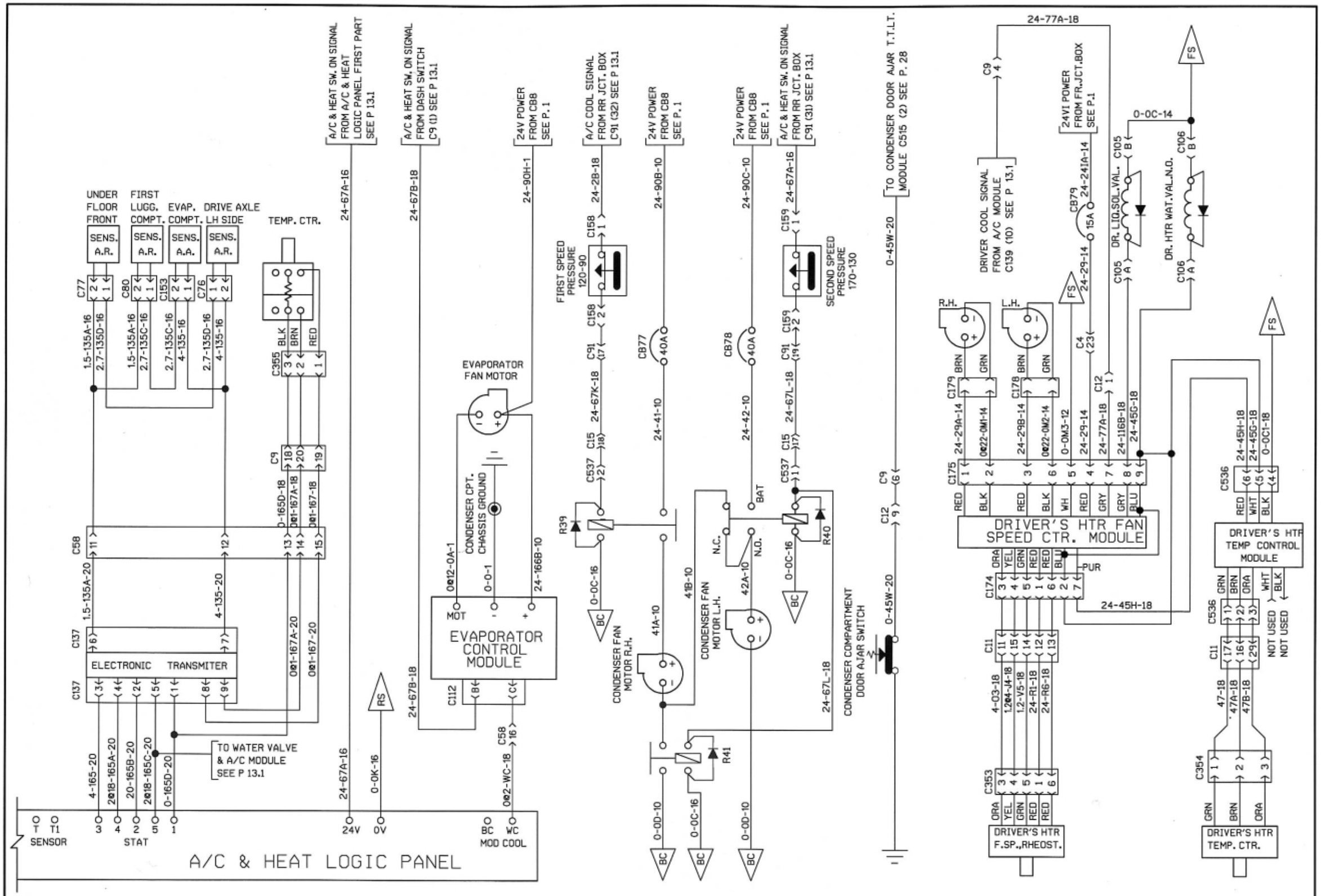

A/C AND HEAT SYSTEM

PREVOST	WIRING DIAGRAM	NO: D060882	PAGE: 13.2	REVISION 03

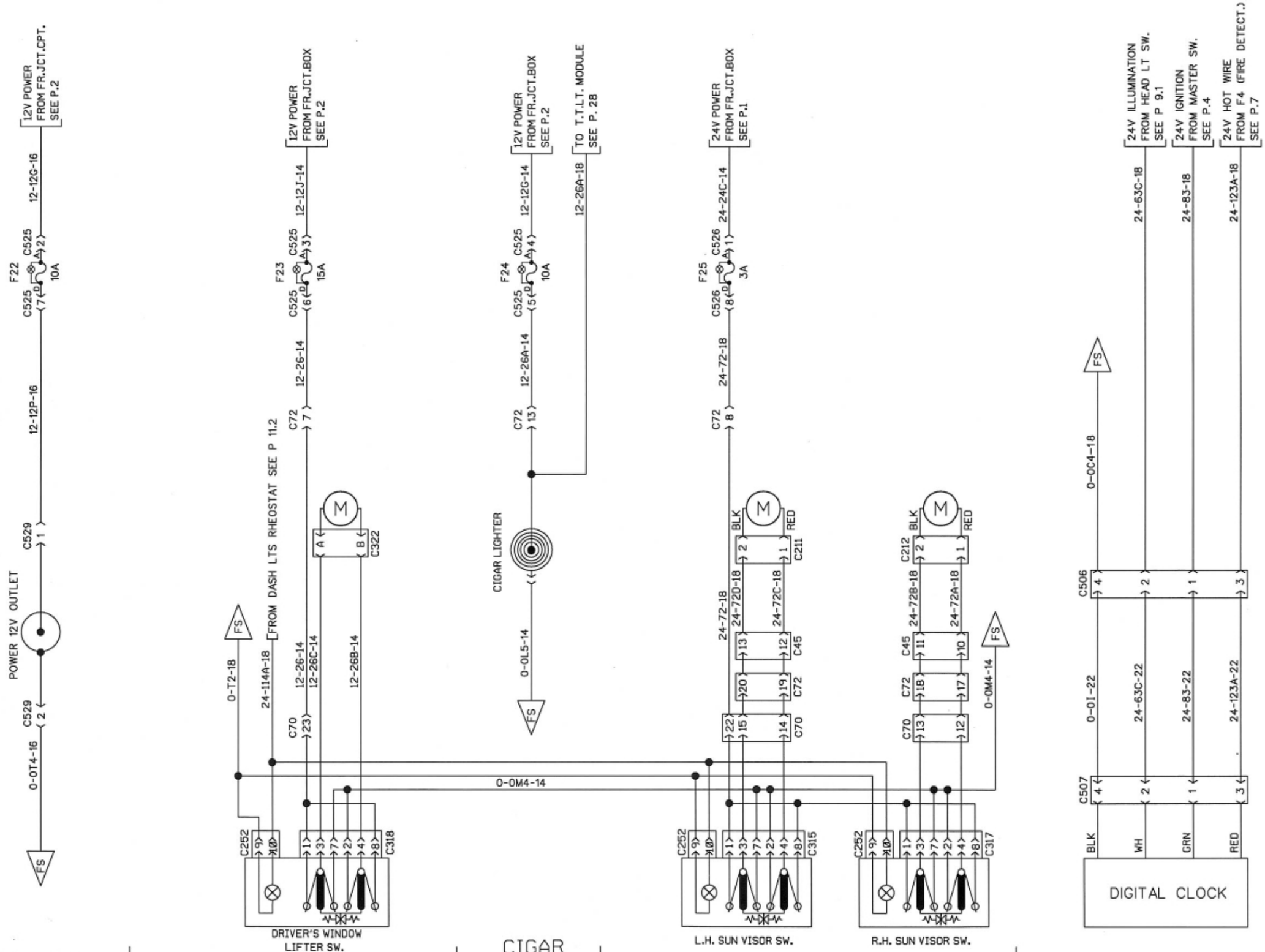

POWER 12V OUTLET | DRIVER'S WINDOW LIFTER | CIGAR LIGHTER | SUN VISOR | DIGITAL CLOCK

PREVOST	WIRING DIAGRAM	NO: D060882	PAGE: 14	REVISION 00

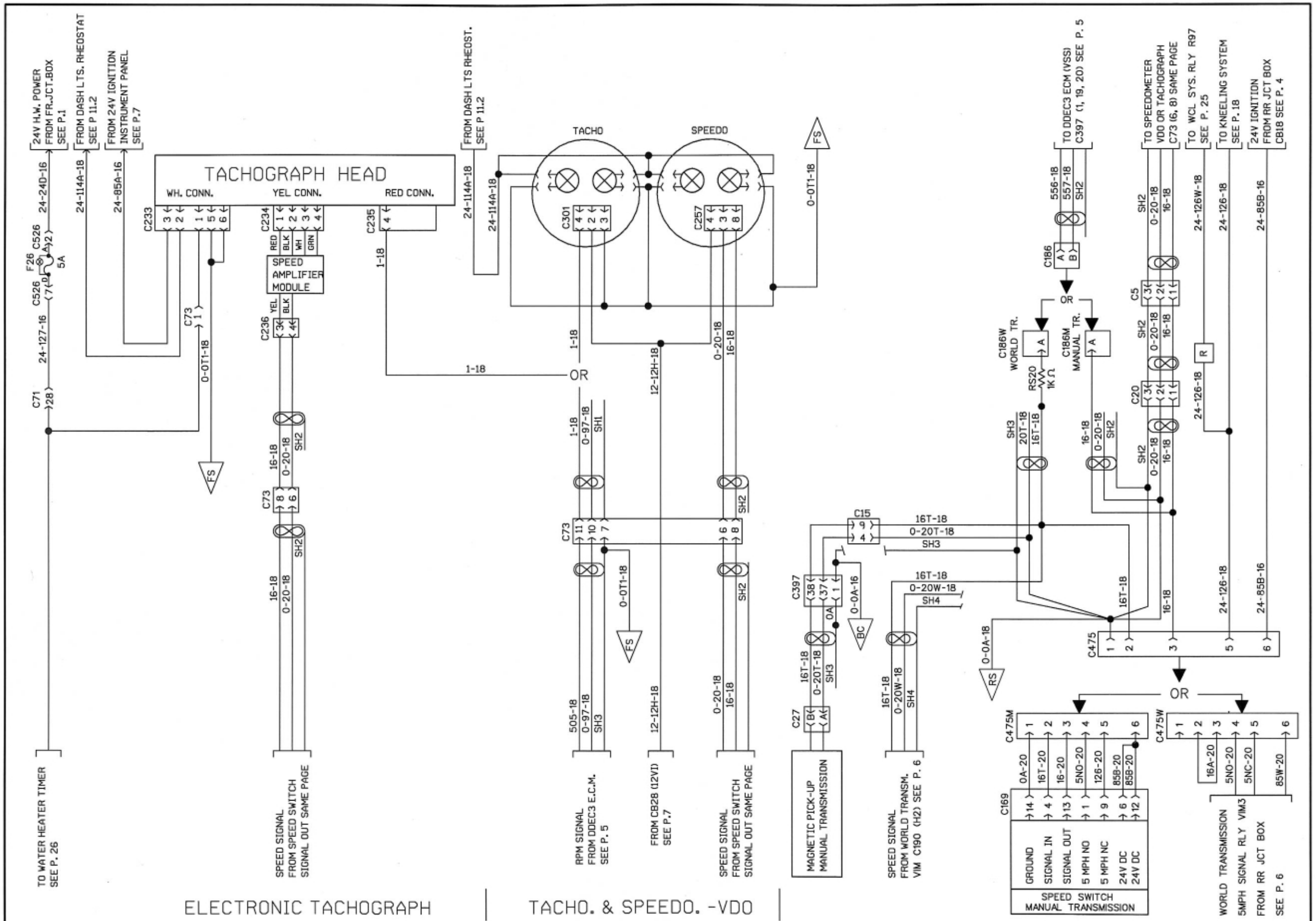

ELECTRONIC TACHOGRAPH | TACHO. & SPEEDO. -VDO

PREVOST	WIRING DIAGRAM	NO: D060882	PAGE: 15	REVISION 00

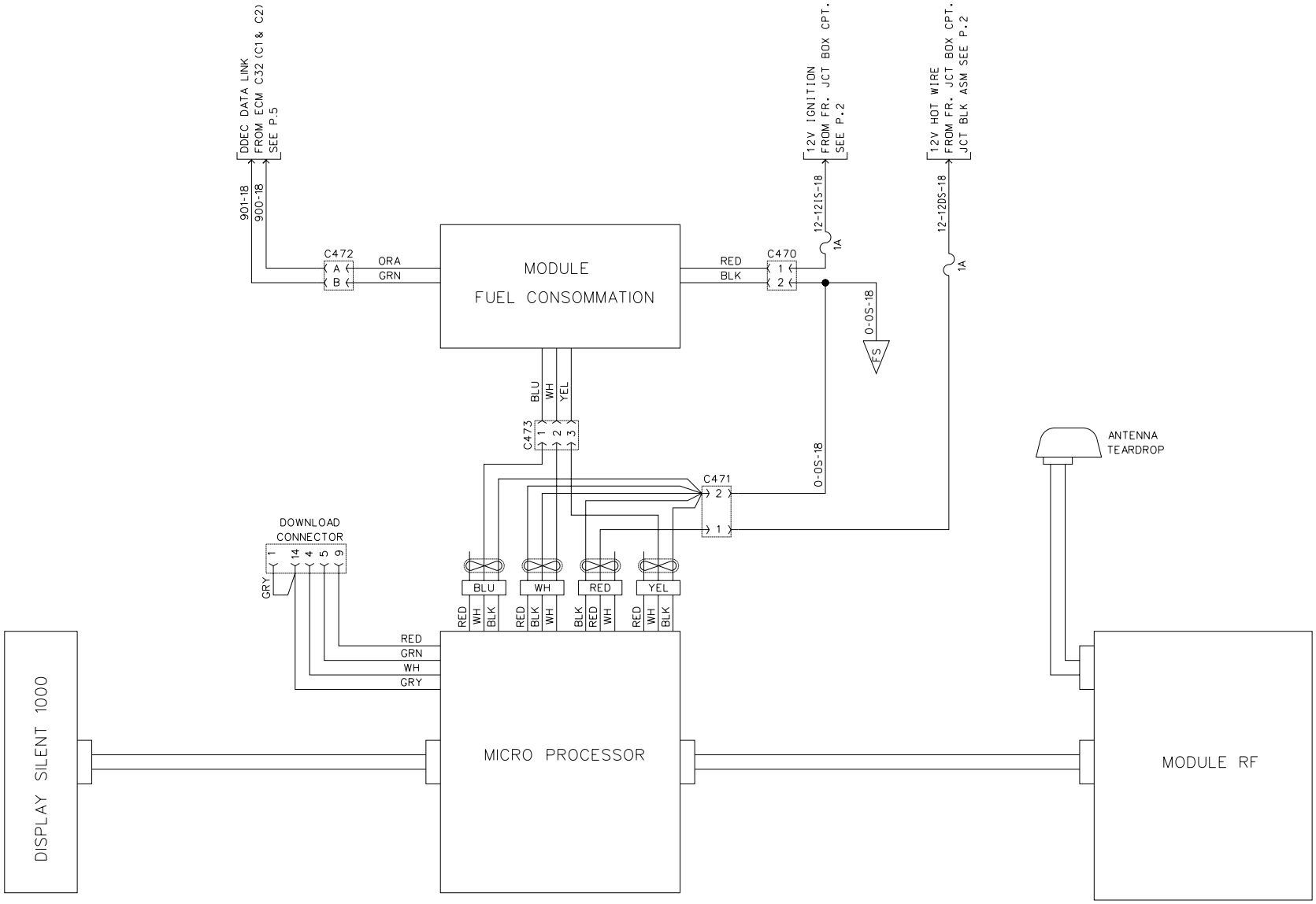

SILENT 1000

PREVOST	WIRING DIAGRAM	NO: D060882	PAGE: 15SP1	REVISION 00

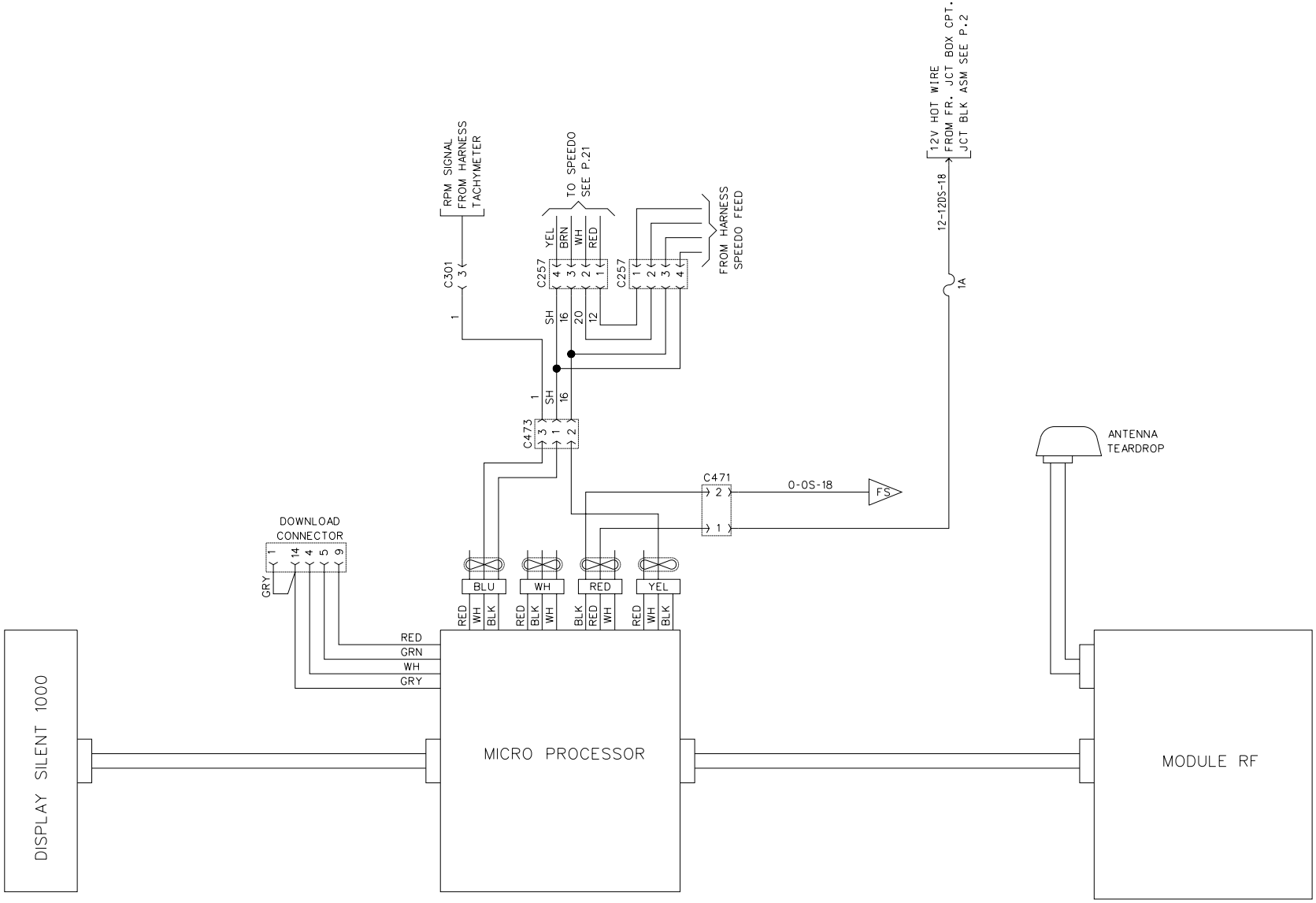

SILENT 1000 W/O FUEL CONSOMATION

PREVOST	WIRING DIAGRAM	NO: D060882	PAGE: 15SP2	REVISION 00

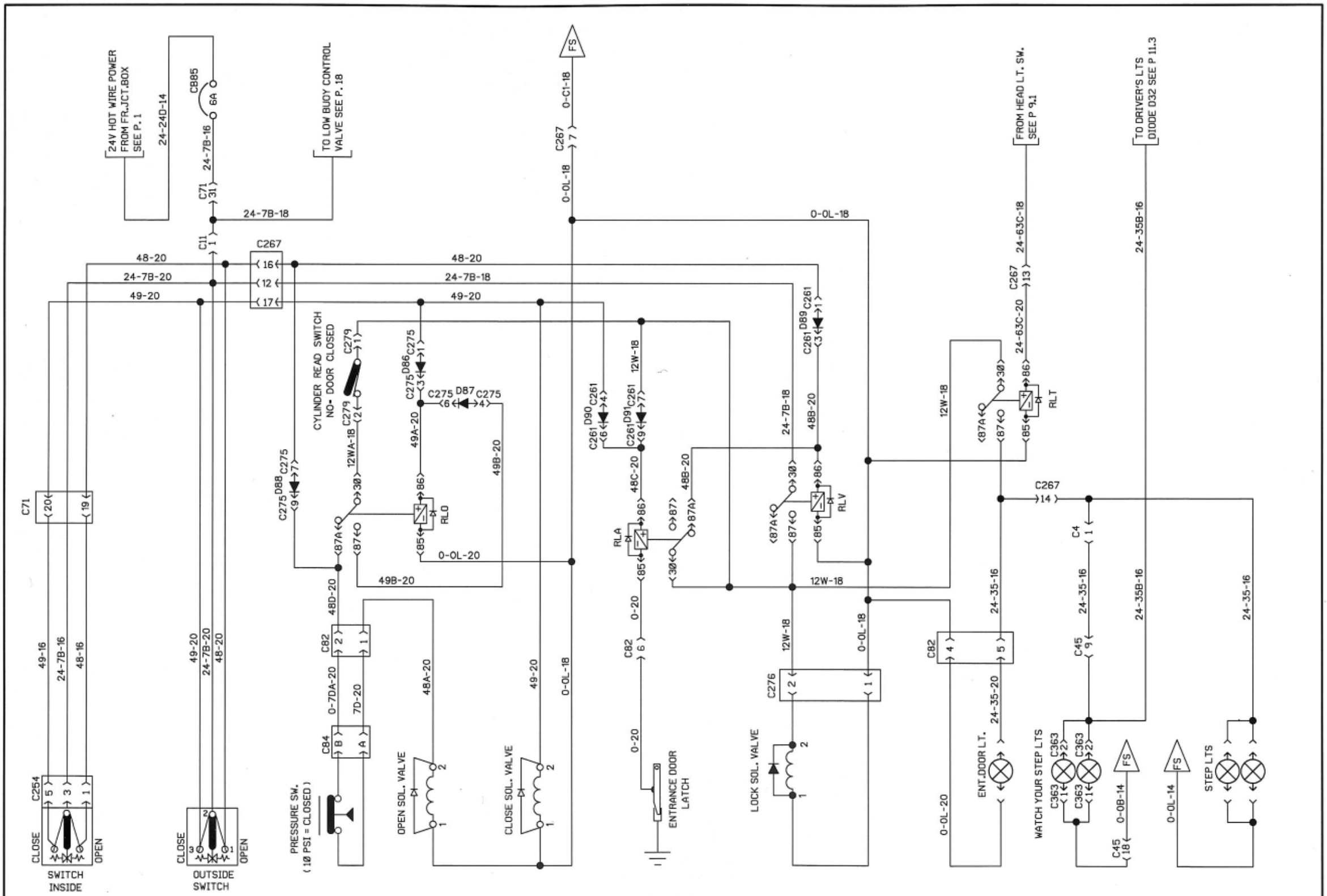

ENTRANCE DOOR (SEDAN)

PREVOST	WIRING DIAGRAM	NO: D060882	PAGE: 16	REVISION 00

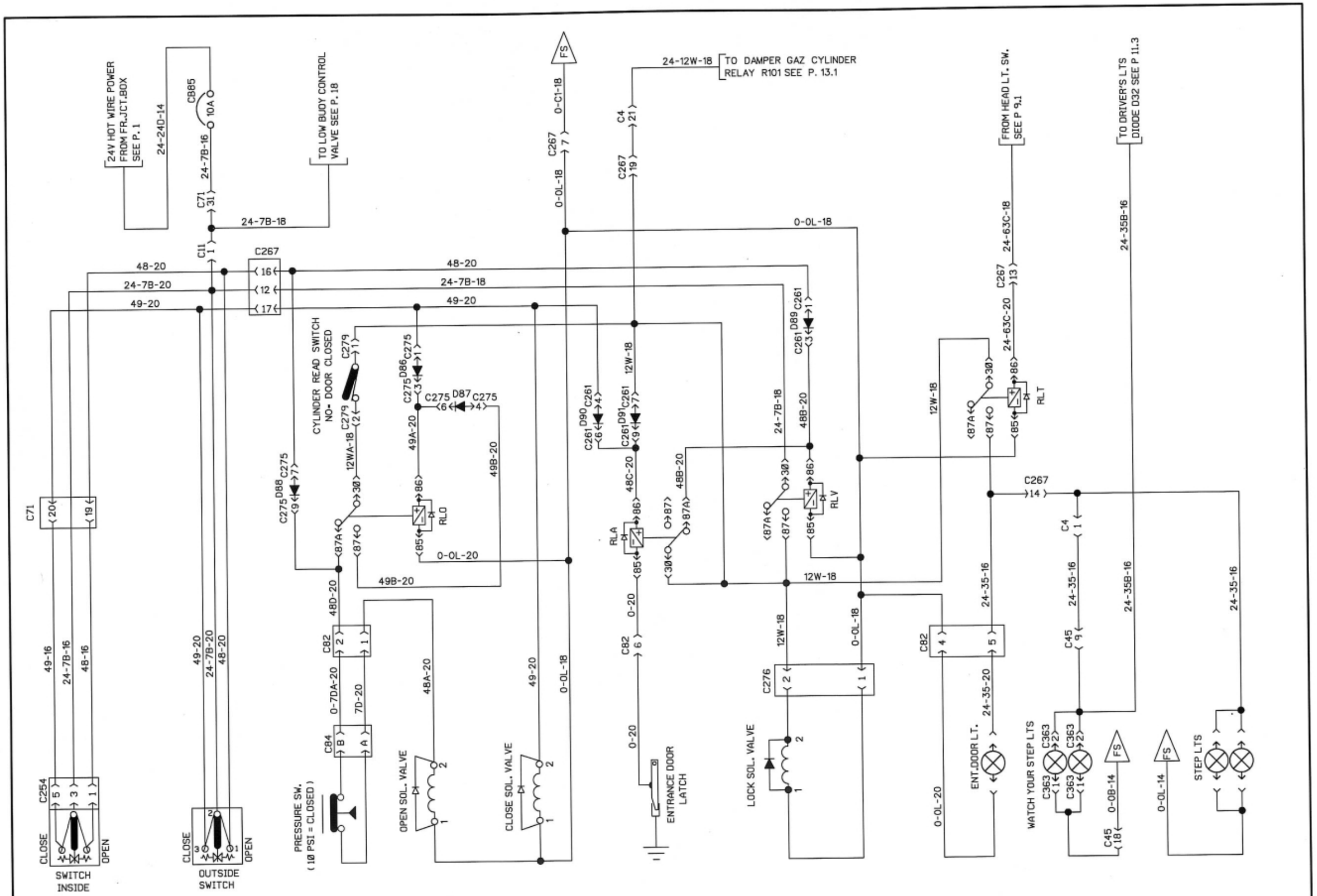

ENTRANCE DOOR (SEDAN)

PREVOST	WIRING DIAGRAM	NO: D060882	PAGE: 16	REVISION 02

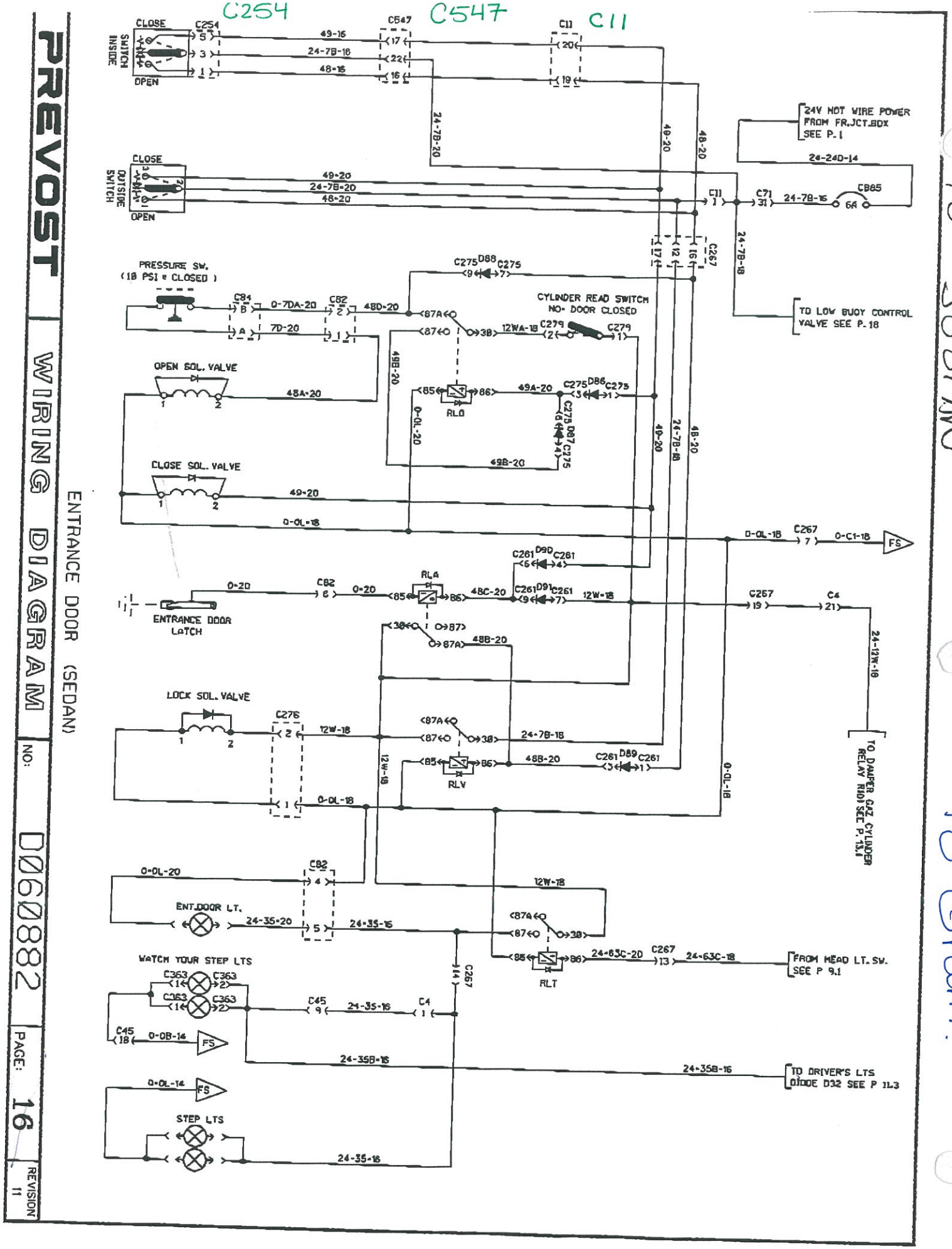
PREVOST
WIRING DIAGRAM
ENTRANCE DOOR (SEDAN)
NO: D060882
PAGE: 16
REVISION 11
C254
C547
C11
SWITCH INSIDE
CLOSE
OPEN
OUTSIDE SWITCH
24V HOT WIRE POWER FROM FR.JCT.BOX SEE P.1
CB65
6A
PRESSURE SW. (18 PSI = CLOSED)
CYLINDER READ SWITCH NO- DOOR CLOSED
TO LOW BUOY CONTROL VALVE SEE P.18
OPEN SOL. VALVE
CLOSE SOL. VALVE
RLO
RLA
RLV
RLT
ENTRANCE DOOR LATCH
LOCK SOL. VALVE
TO DAMPER GAZ CYLINDER RELAY RLO SEE P.13.1
ENT.DOOR LT.
WATCH YOUR STEP LTS
FROM HEAD LT. SW. SEE P 9.1
TO DRIVER'S LTS DIODE D32 SEE P 1L3
STEP LTS
FS
TO 50SIAN
TO Gram.

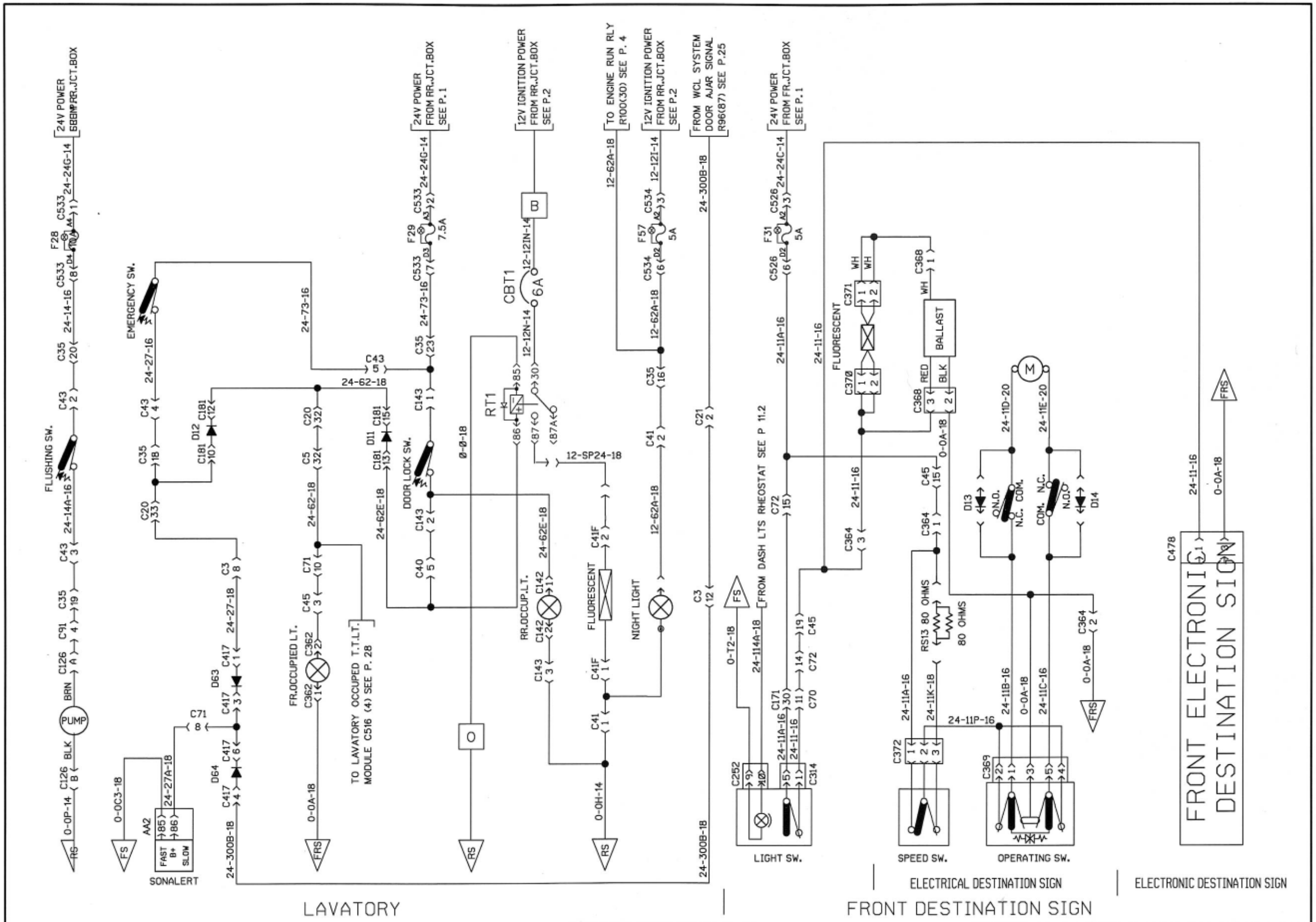

PREVOST	WIRING DIAGRAM	NO: D060882	PAGE: 17	REVISION 09

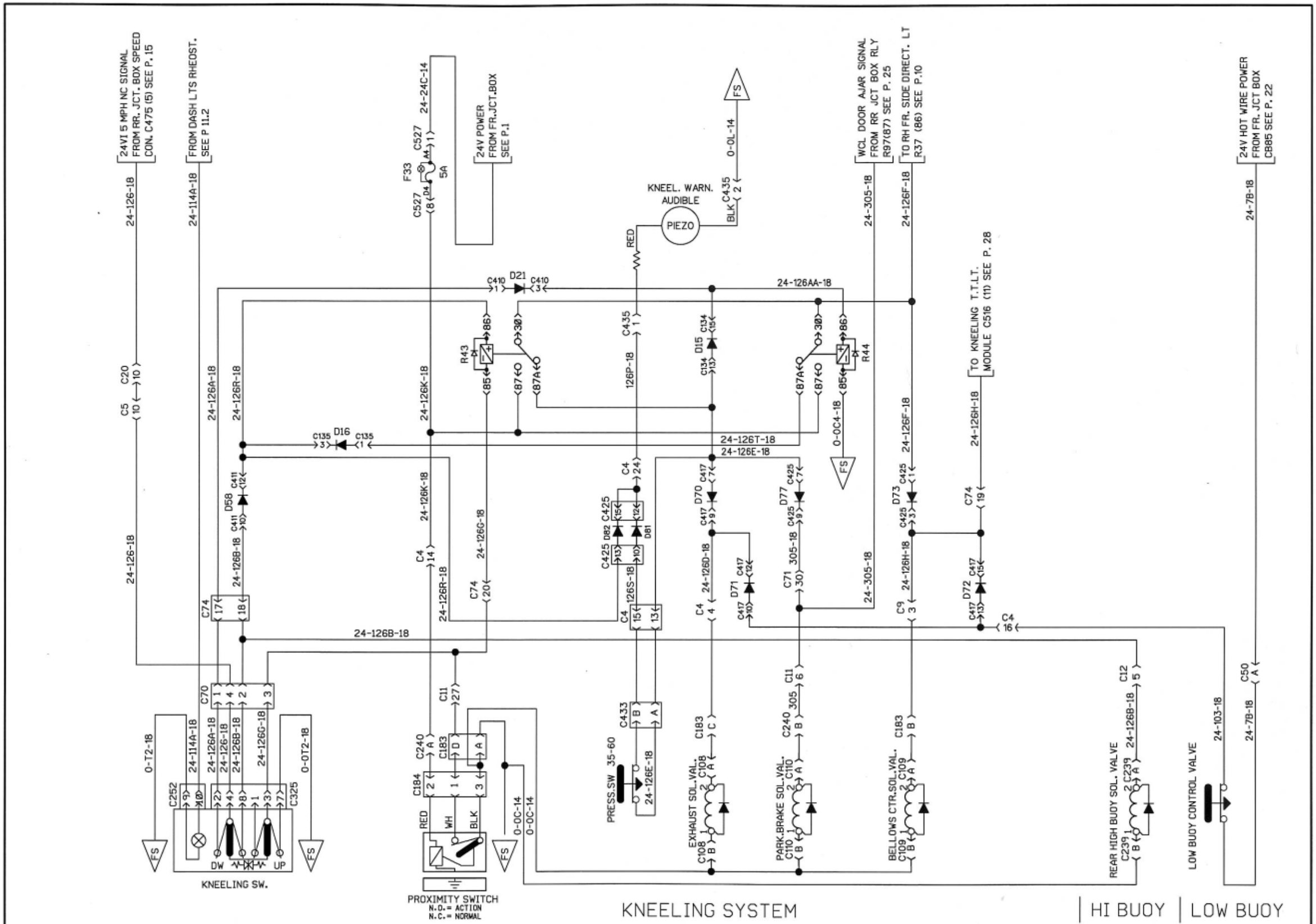

PREVOST | WIRING DIAGRAM | NO: D060882 | PAGE: 18 | REVISION 00

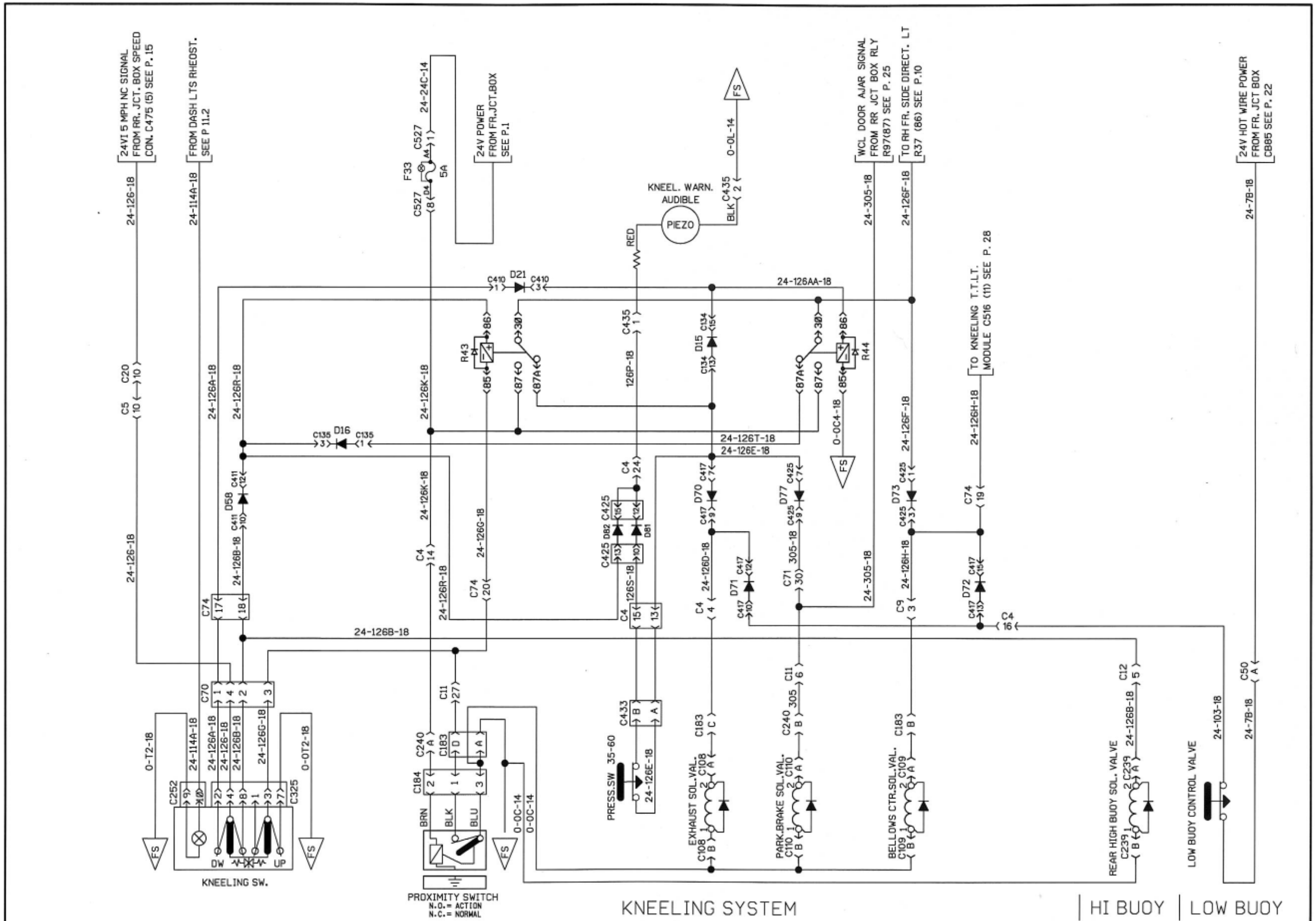

PREVOST	WIRING DIAGRAM	NO: D060882	PAGE: 18	REVISION 03

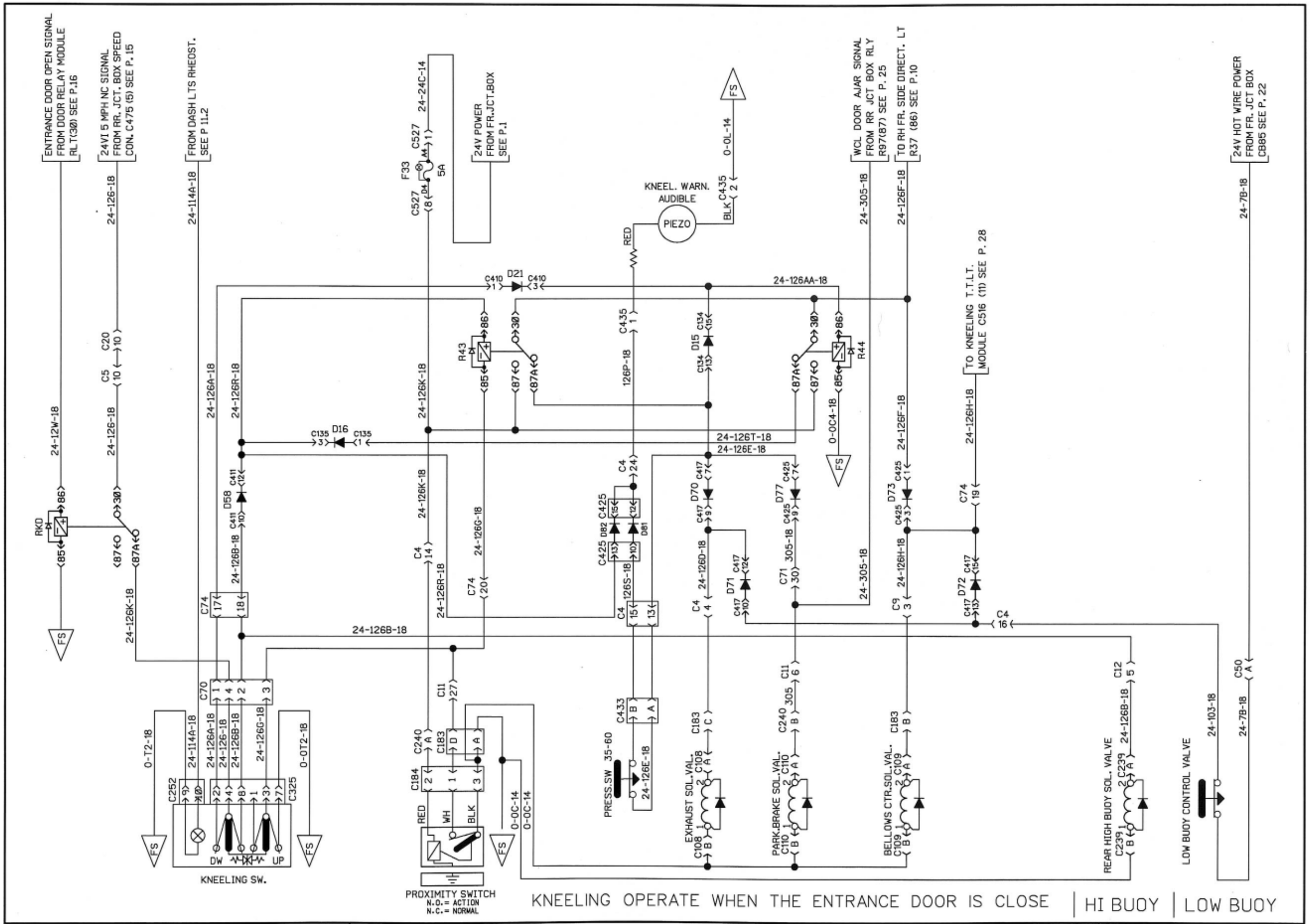

PREVOST	WIRING DIAGRAM	NO: D060882	PAGE: 18sp1	REVISION 00

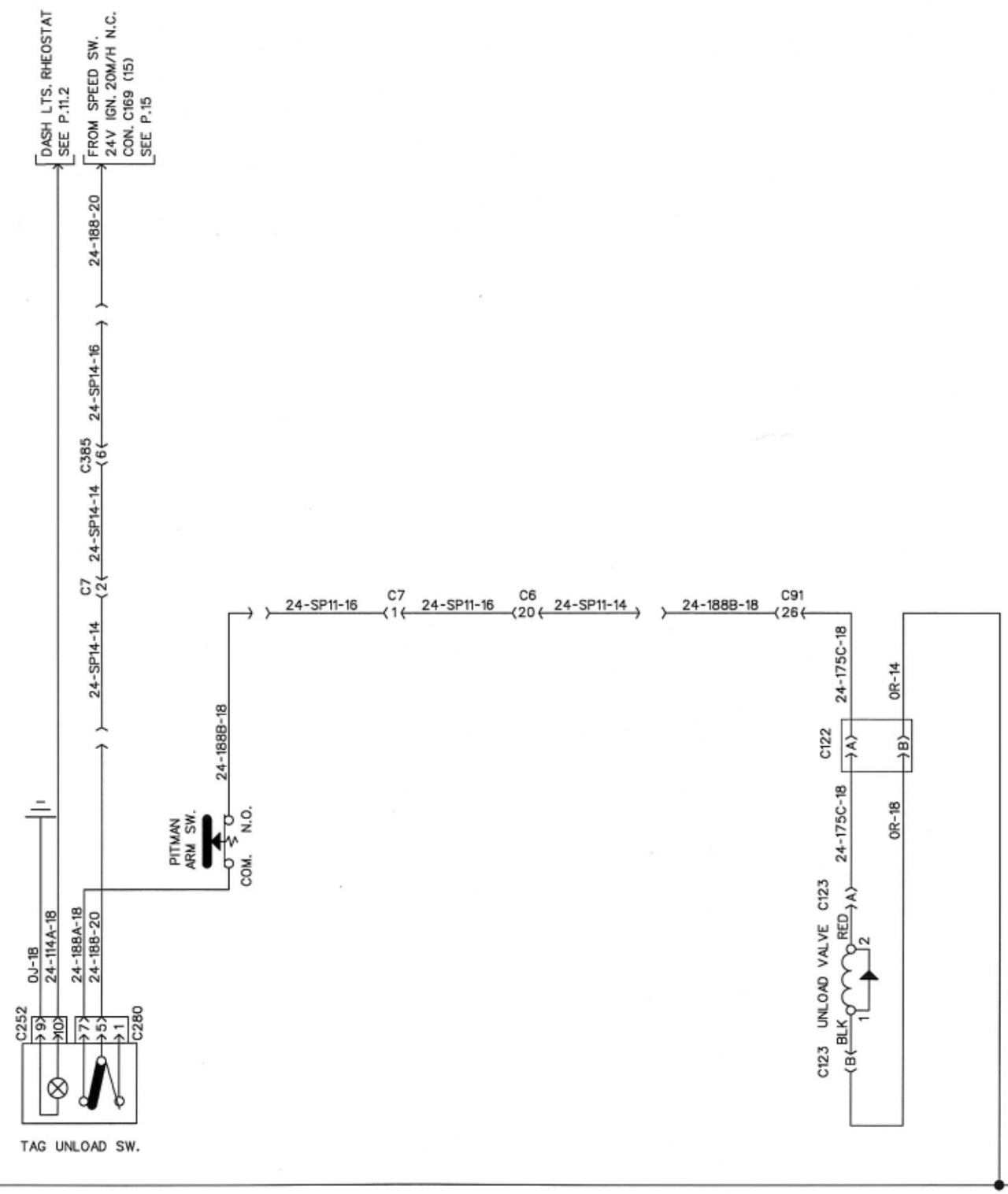

UNLOAD TAG SYSTEM

PREVOST	WIRING DIAGRAM	NO: D060882	PAGE: 18SP2	REVISION 00

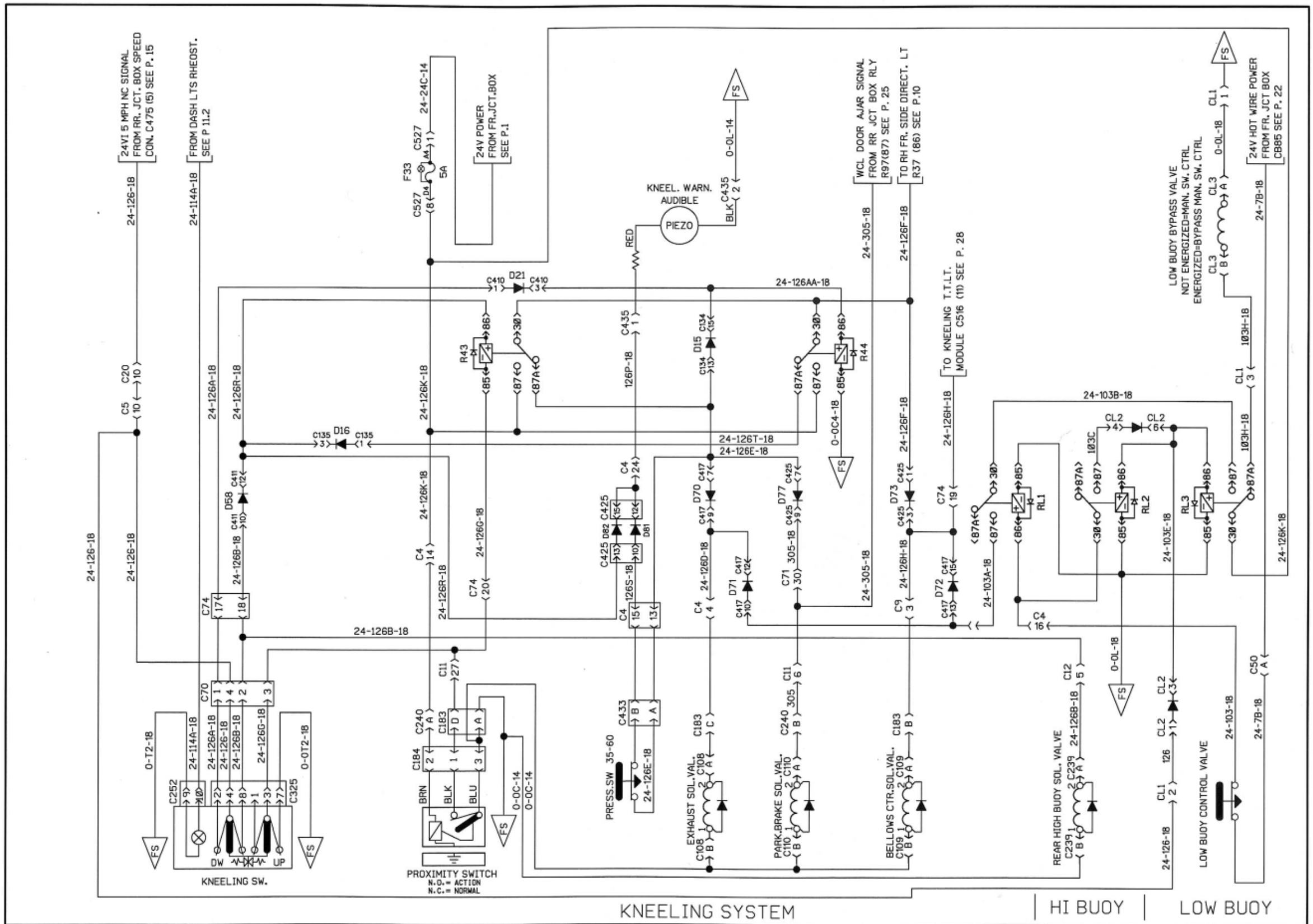

PREVOST	WIRING DIAGRAM	NO: D060882	PAGE: 18sp3	REVISION 01

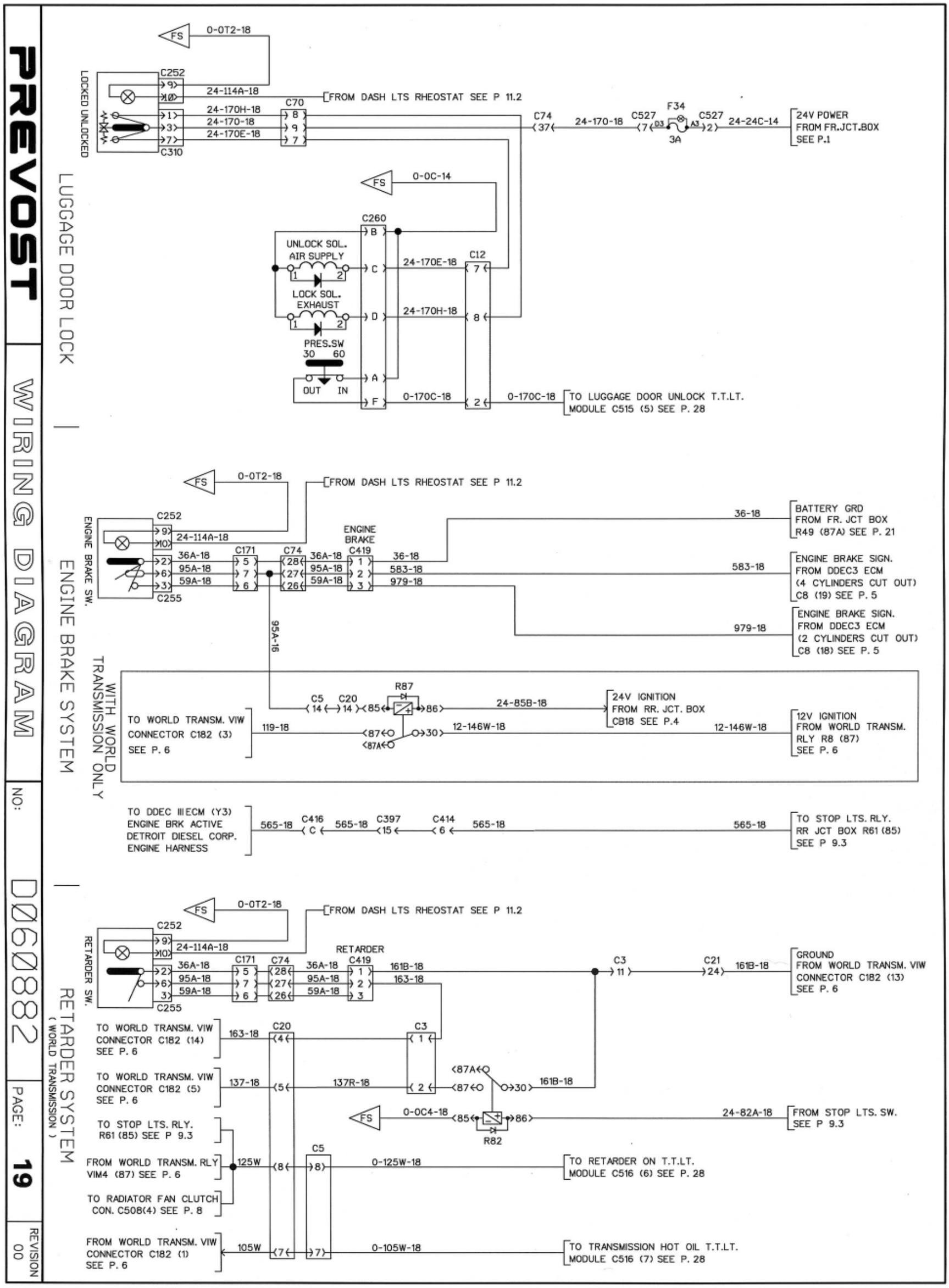

NO: D060882

PAGE: 19

REVISION 00

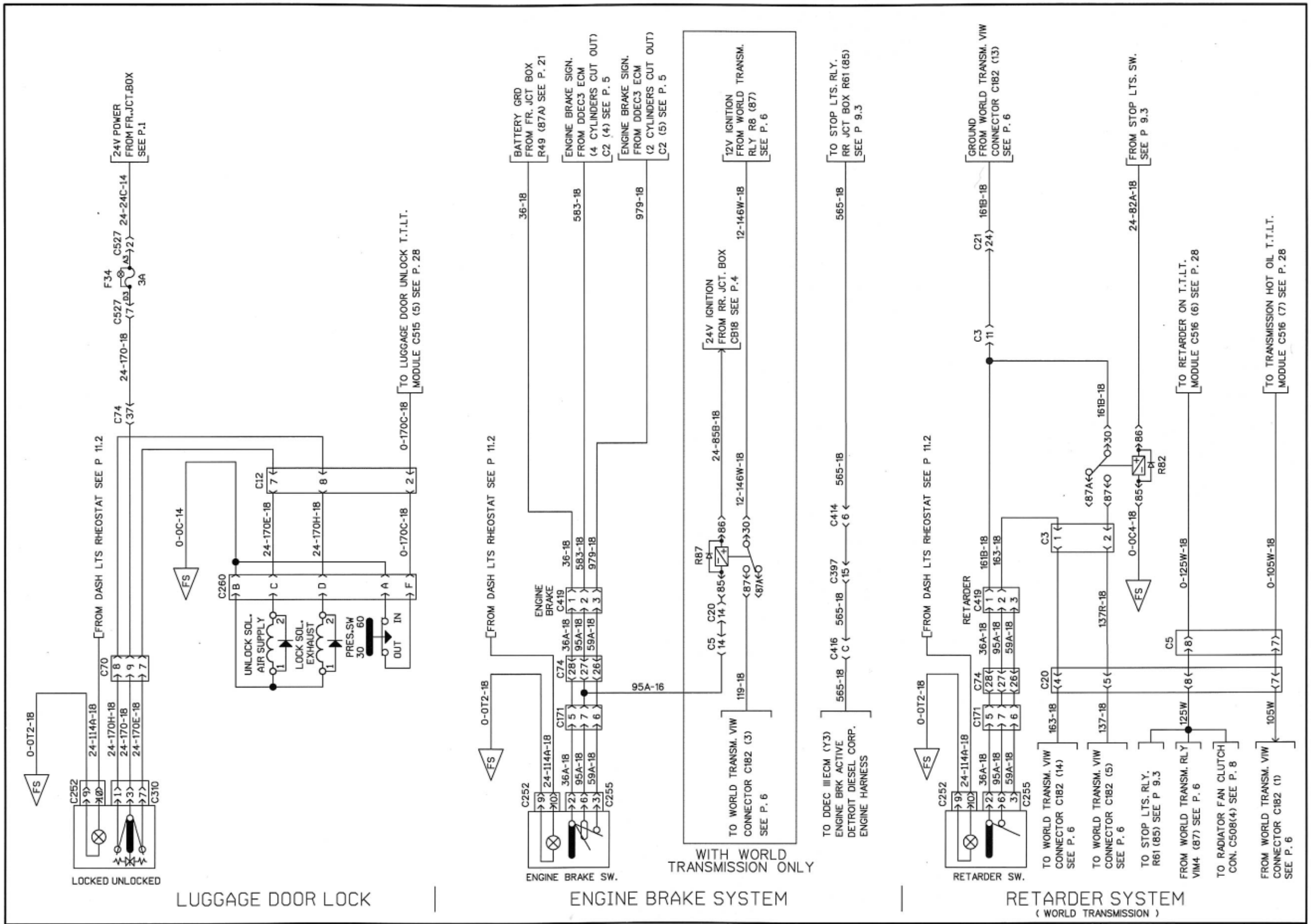

PREVOST	WIRING DIAGRAM	NO: D060882	PAGE: 19	REVISION 03

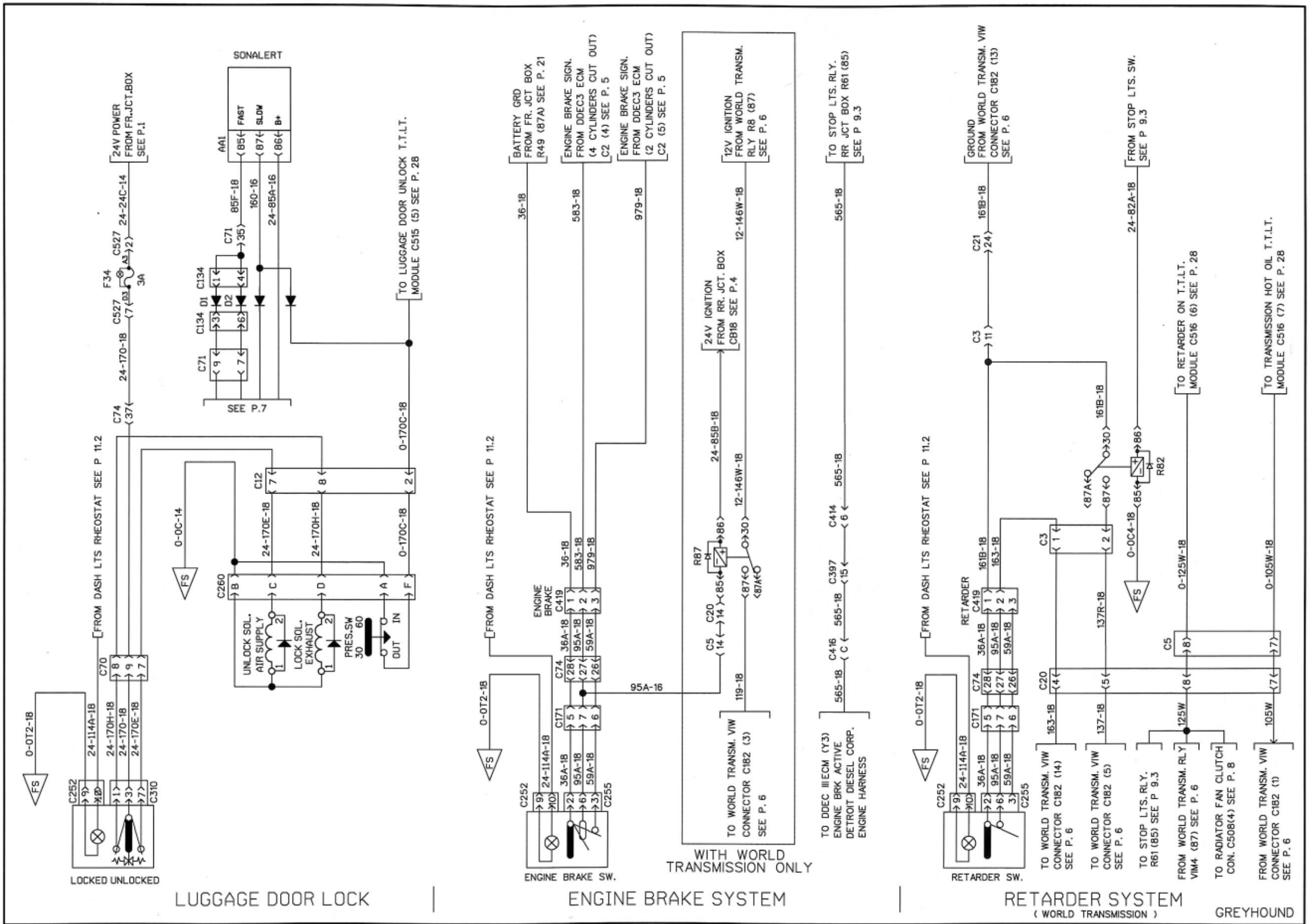

PREVOST	WIRING DIAGRAM	NO: D060882	PAGE: 19sp1	REVISION 00

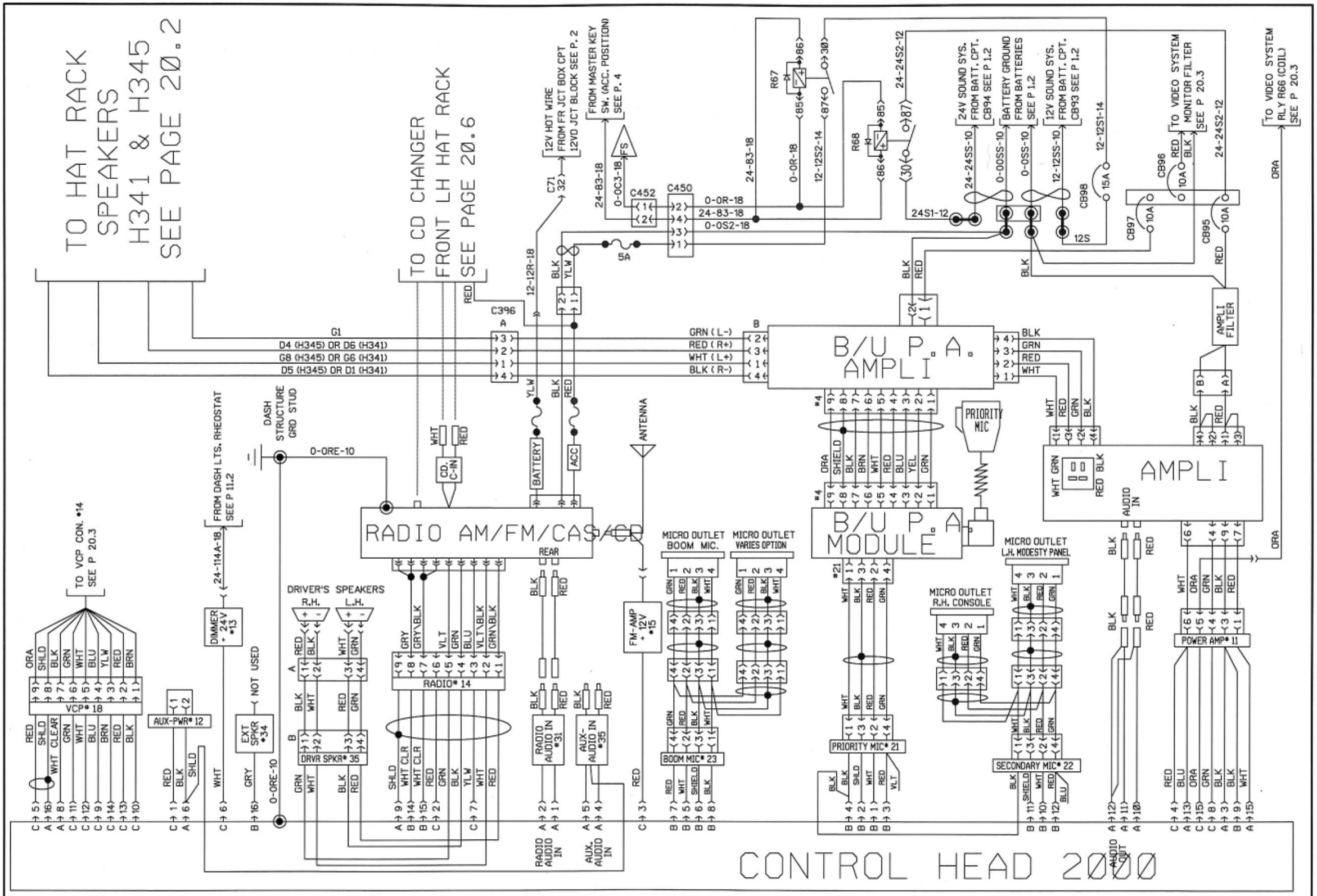

SOUND SYSTEM H3-45

PREVOST	WIRING DIAGRAM	NO: D060882	PAGE: 20.1	REVISION 00

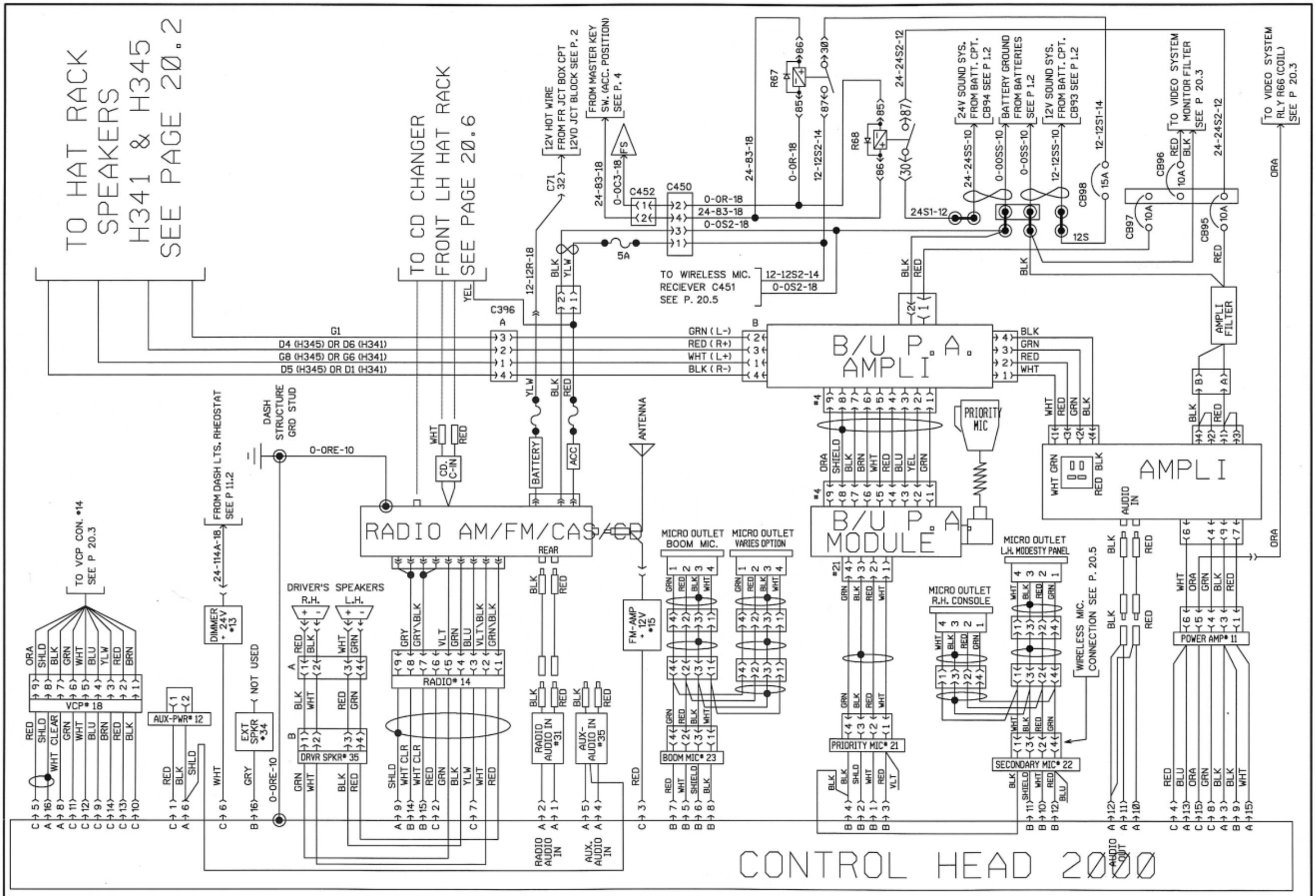

SOUND SYSTEM H3-45

PREVOST	WIRING DIAGRAM	NO: D060882	PAGE: 20.1	REVISION 03

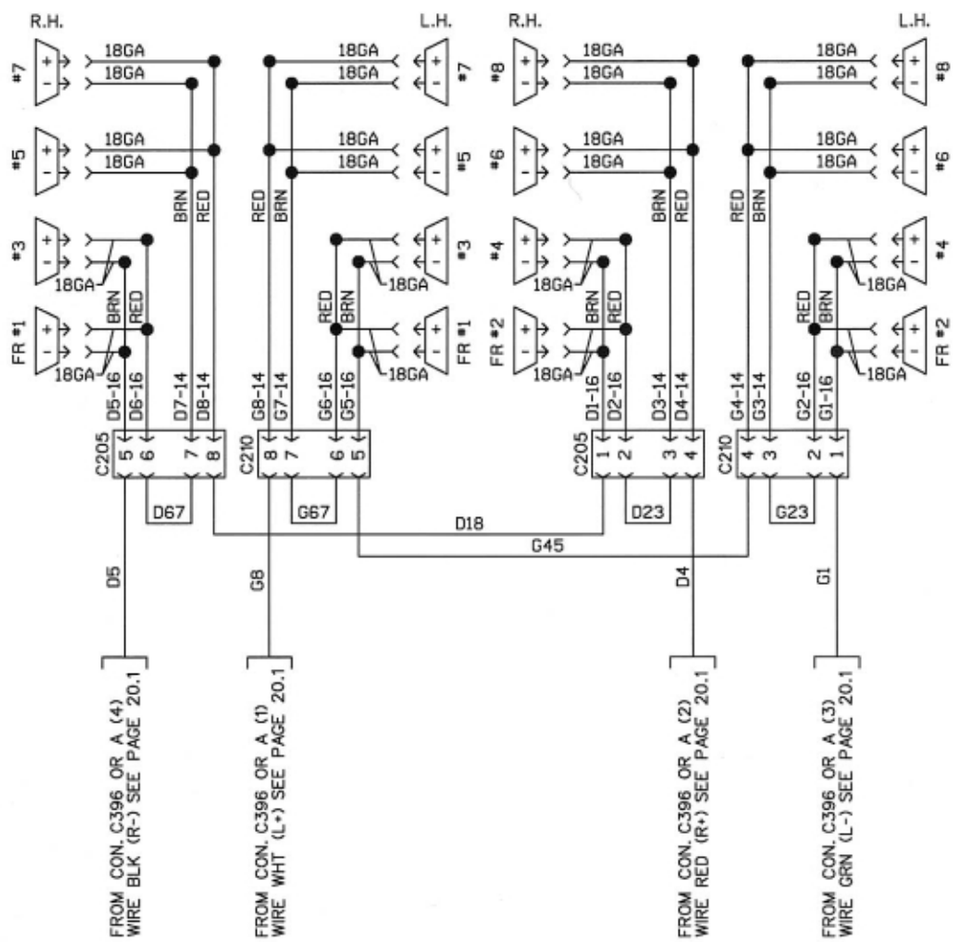

HAT RACK SPEAKERS H3-45

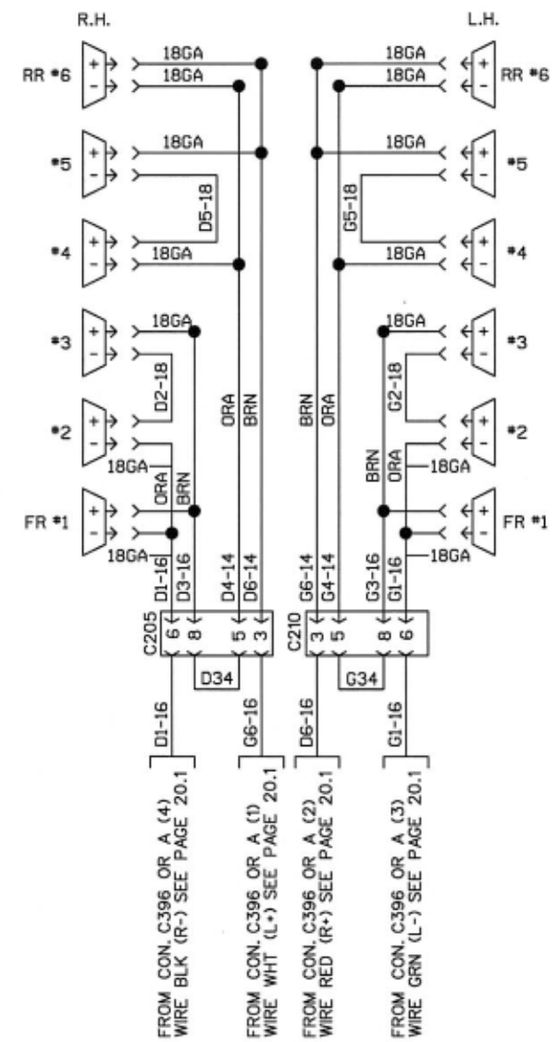

HAT RACK SPEAKERS H3-41

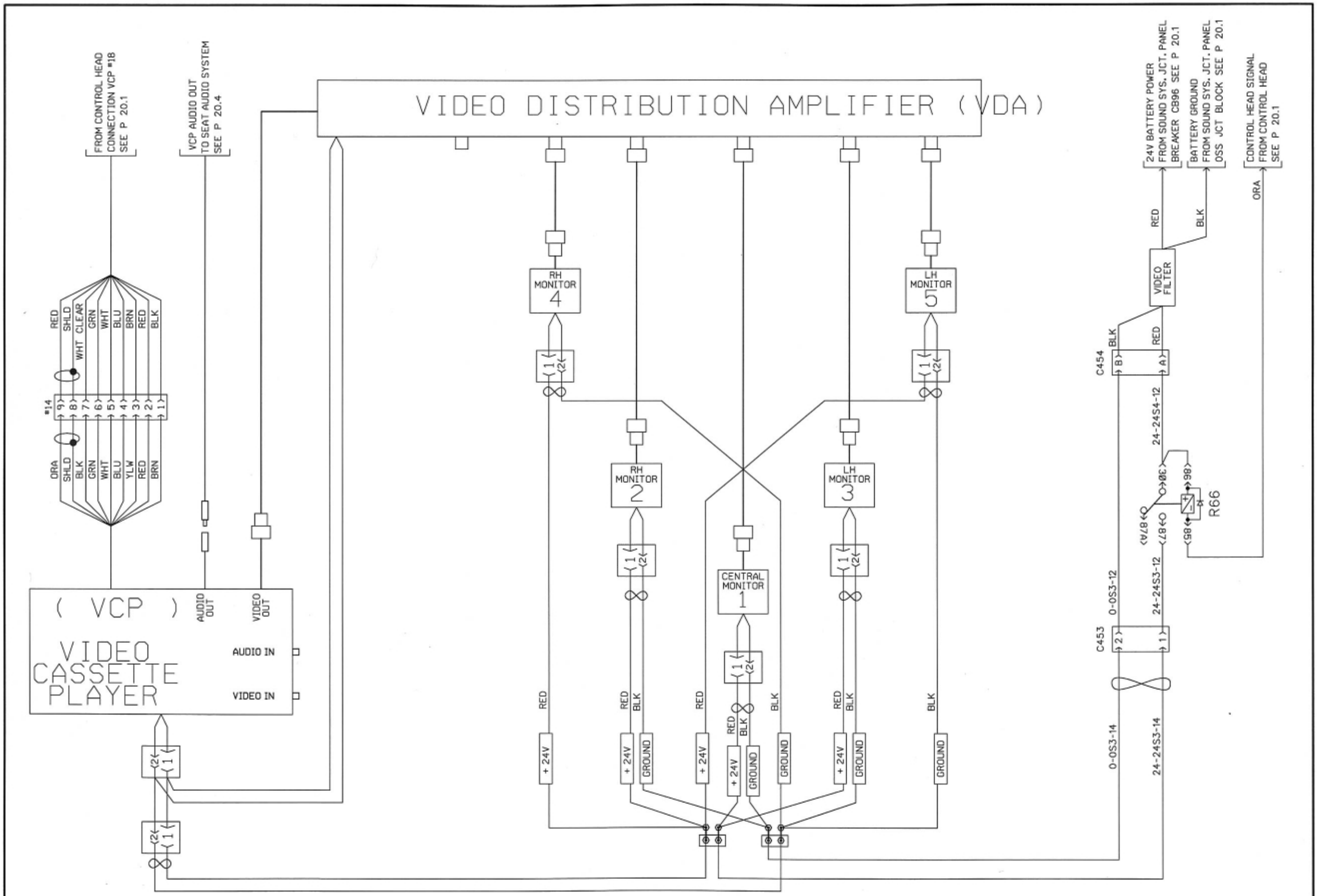

VIDEO SYSTEM

PREVOST	WIRING DIAGRAM	NO: D060882	PAGE: 20.3	REVISION 00

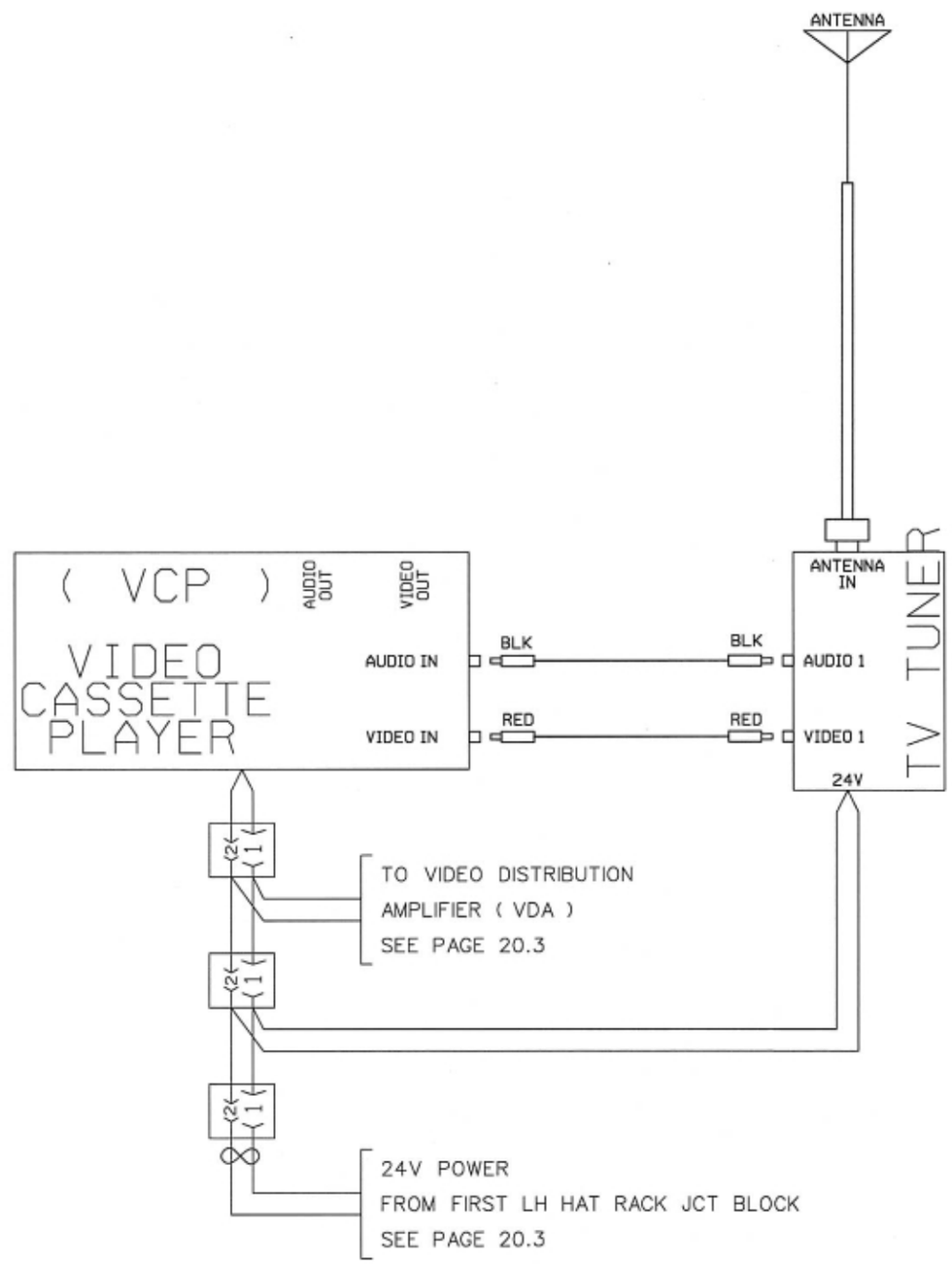

TV RECEIVER

PREVOST	WIRING DIAGRAM	NO: D060882	PAGE: 20.4	REVISION 00

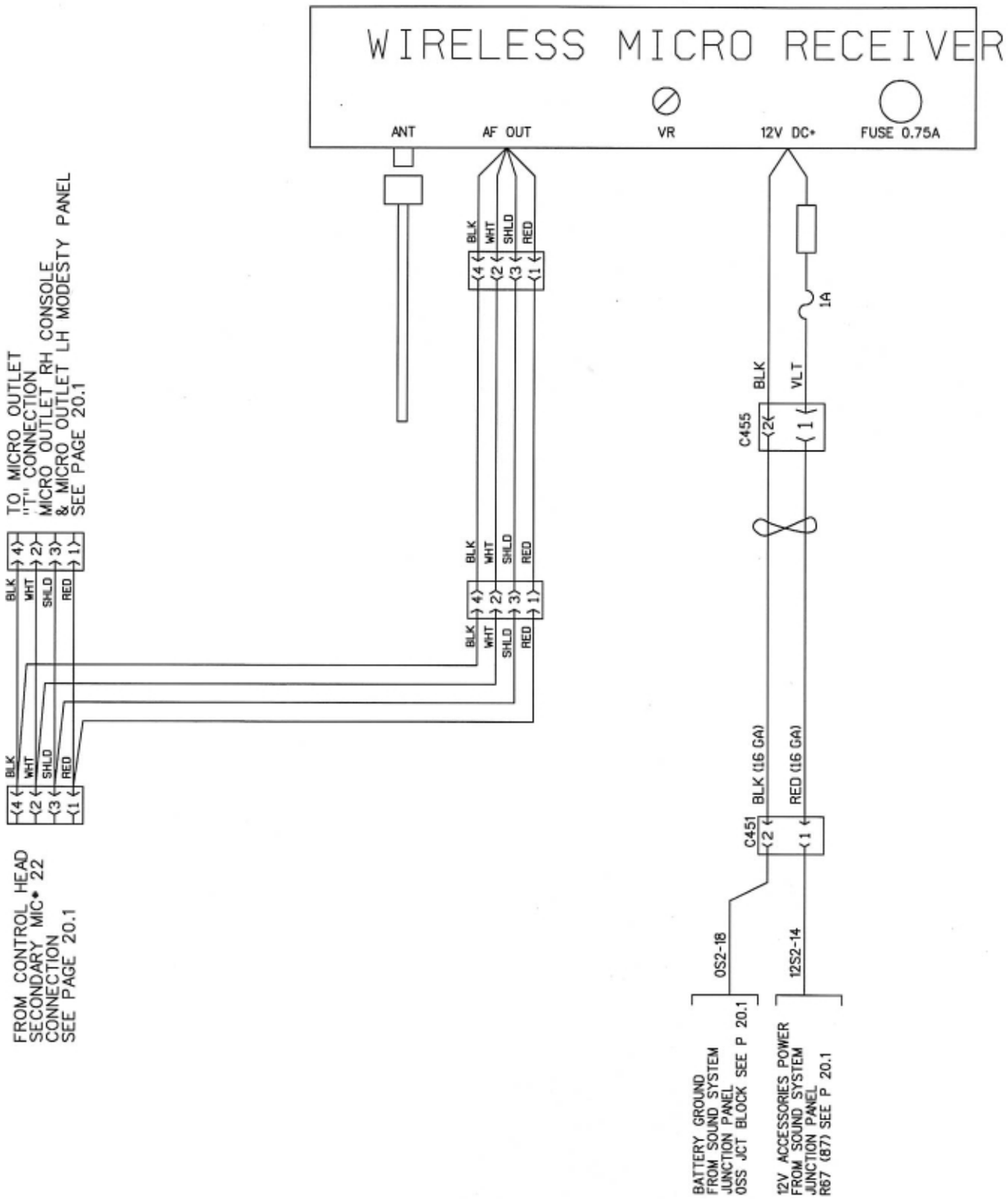

WIRELESS MICROPHONE

PREVOST	WIRING DIAGRAM	NO: D060882	PAGE: 20.5	REVISION 00

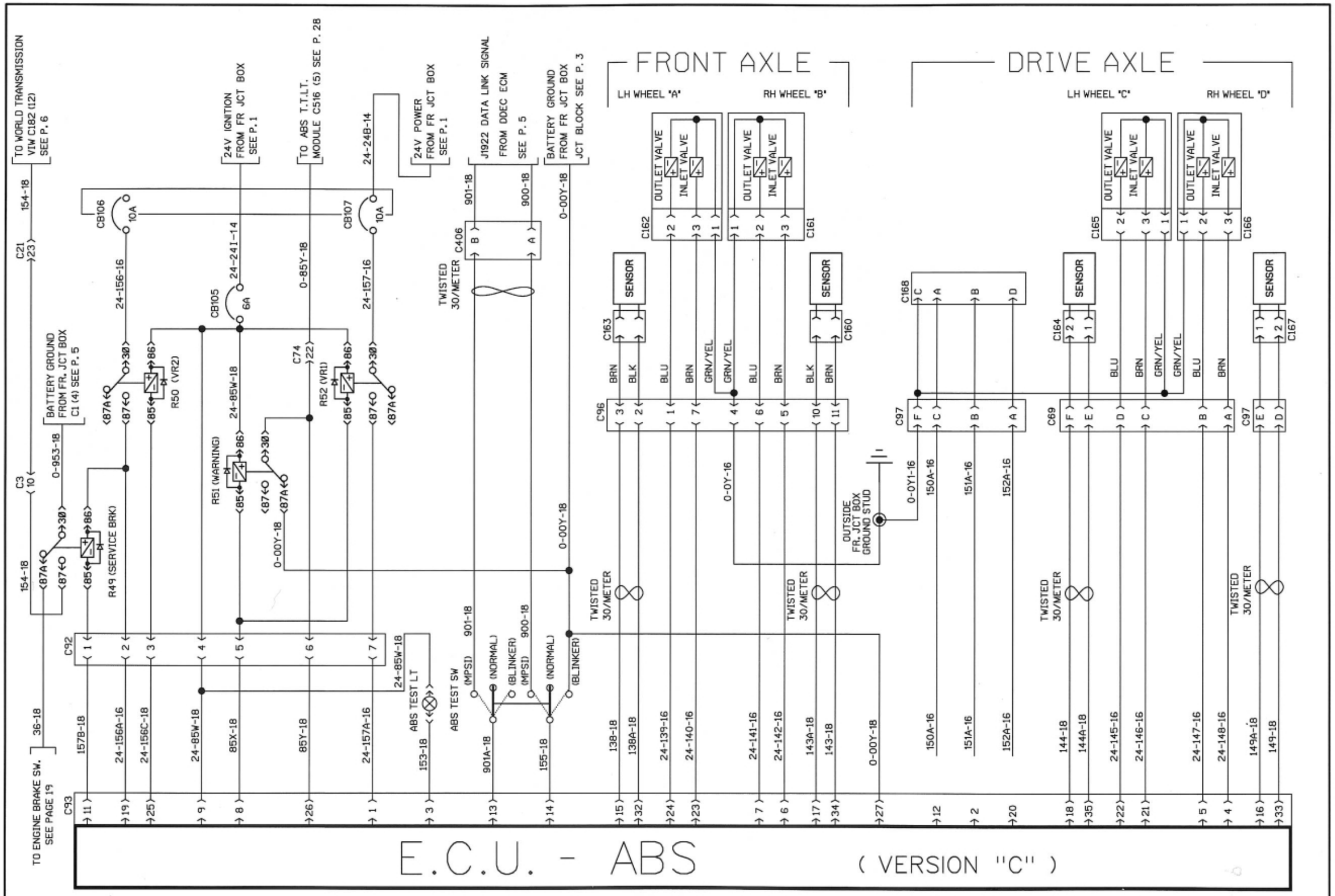

PREVOST	WIRING DIAGRAM	NO: D060882	PAGE: 21	REVISION 00

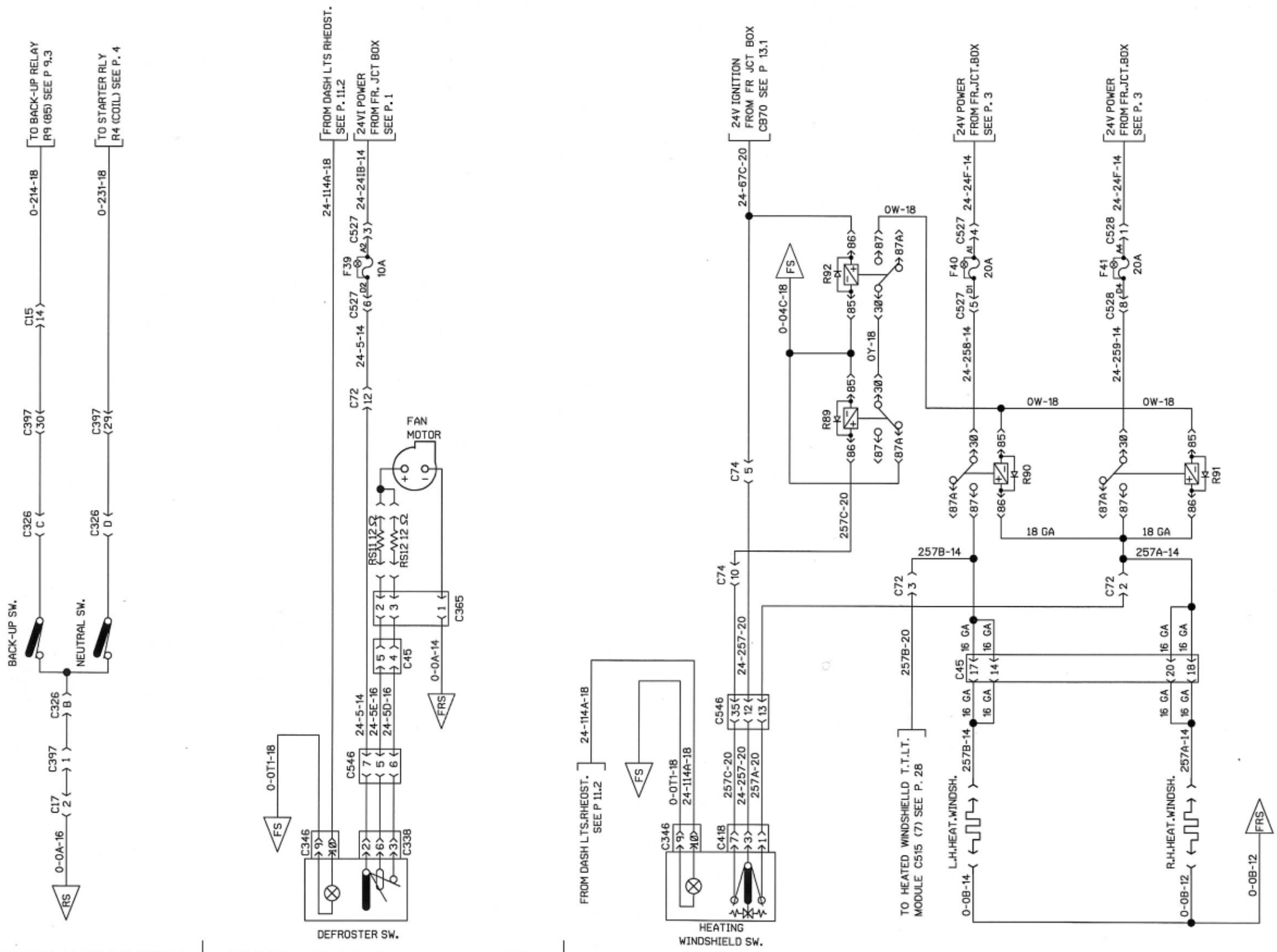

MANUAL TRANSMISSION | UPPER WINDSHIELD DEFROST | HEATED WINDSHIELD

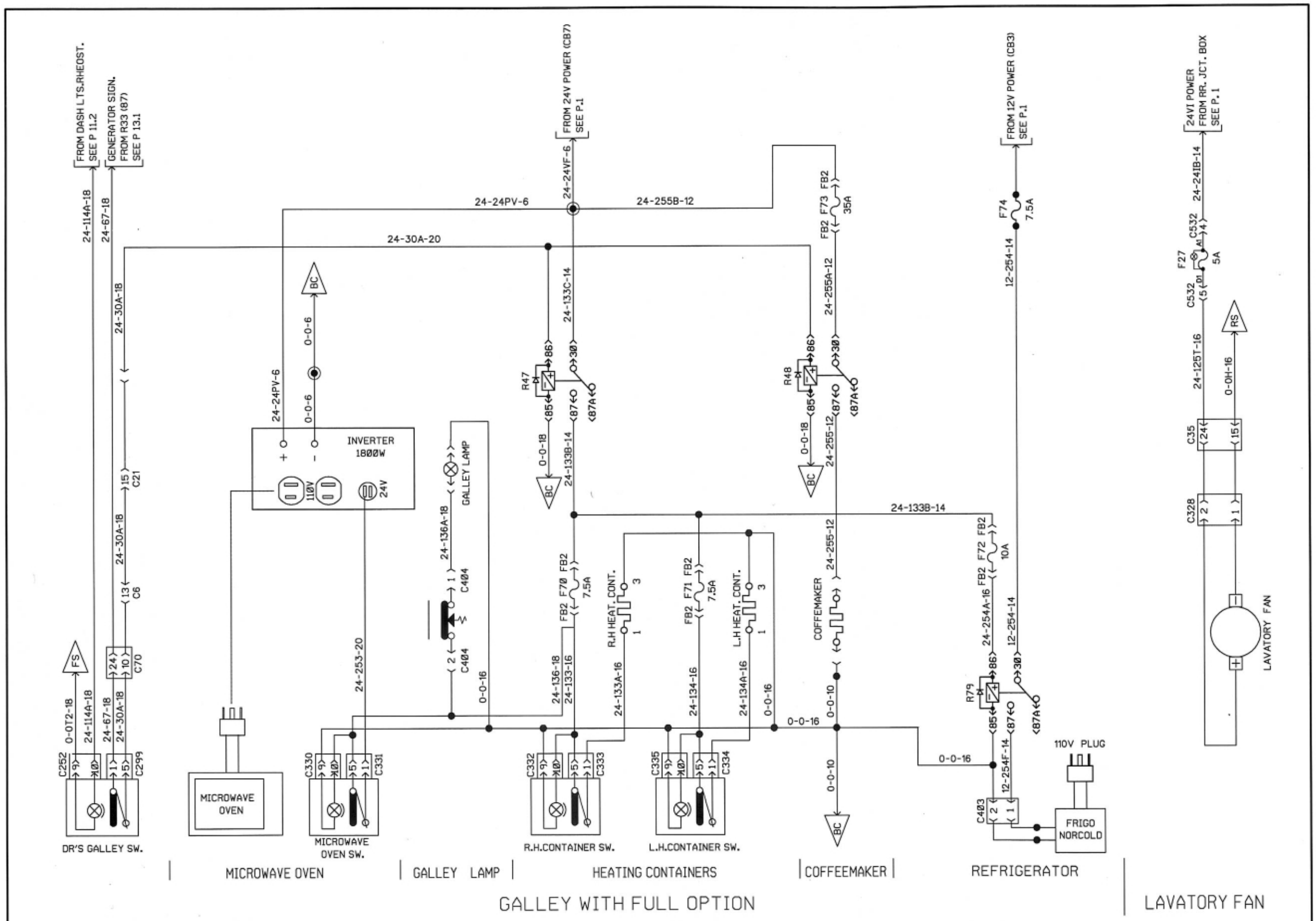

PREVOST	WIRING DIAGRAM	NO: D060882	PAGE: 23	REVISION 10

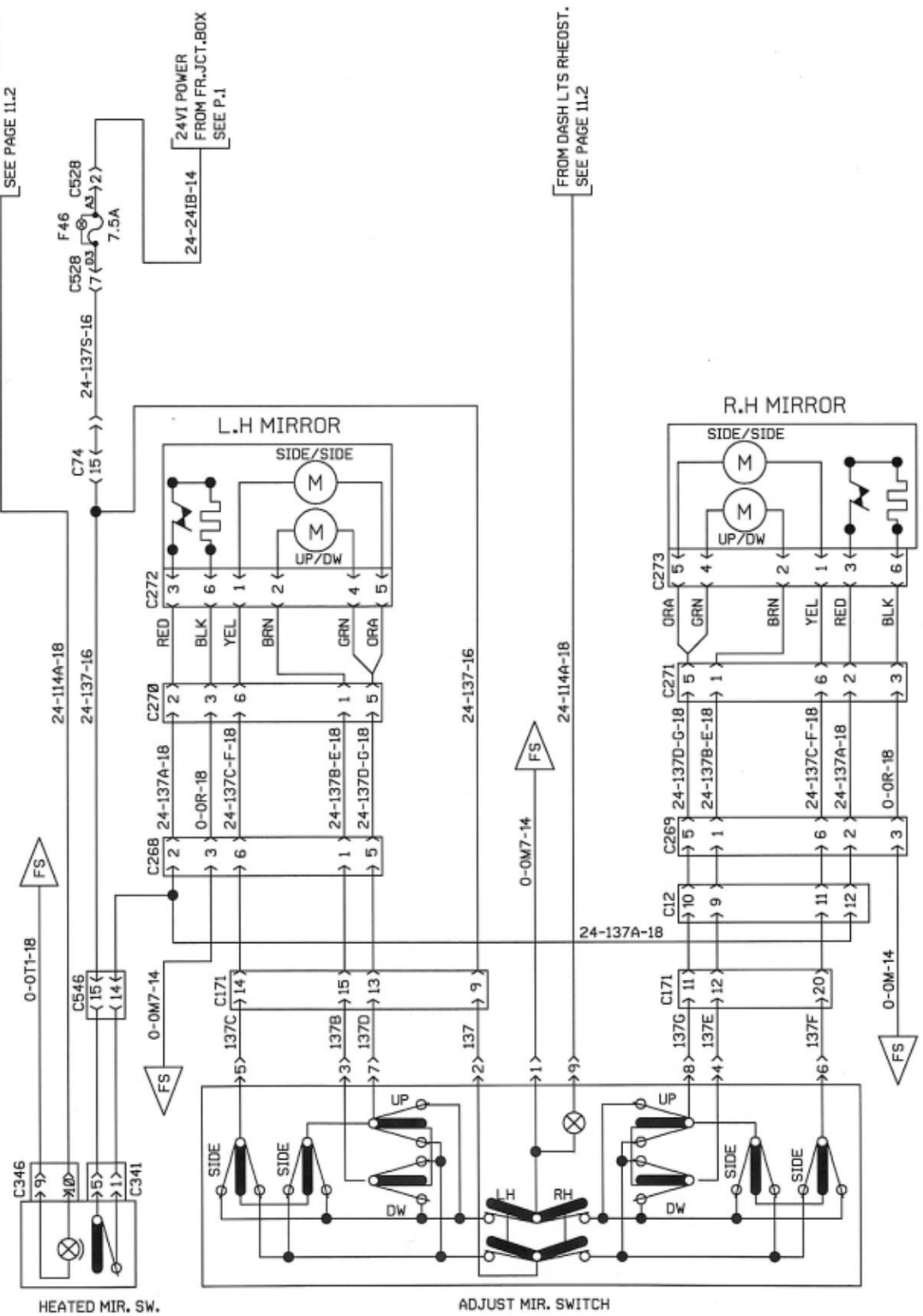

REAR VIEW MIRROR SPARTAN - 1 ADJUSTMENT SW. & 1 HEATED SW.

PREVOST	WIRING DIAGRAM	NO: D060882	PAGE: 24.1	REVISION 00

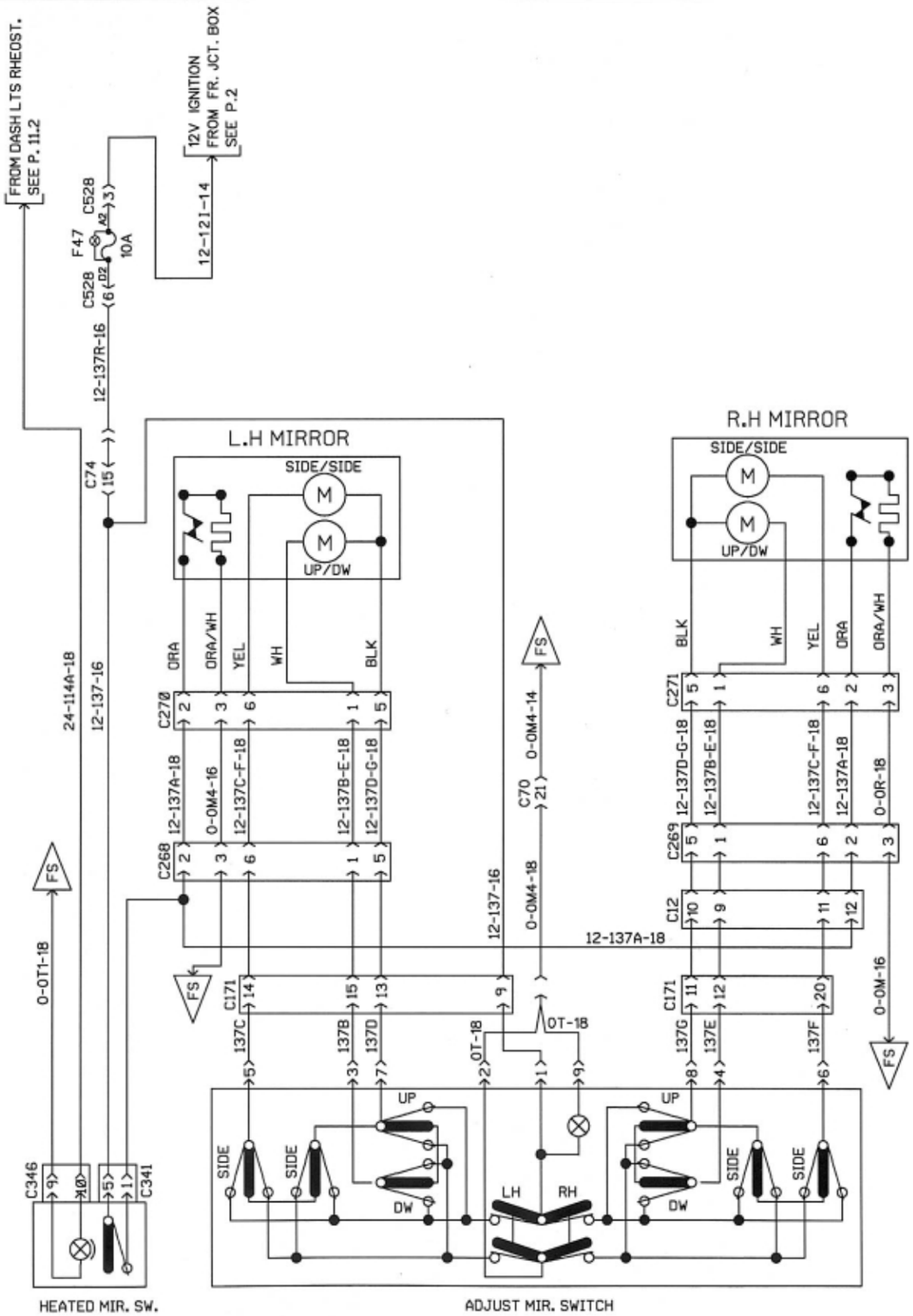

REAR VIEW MIRROR RAMCO FLAT - 1 ADJUSTMENT SW. & 1 HEATED SW.

PREVOST	WIRING DIAGRAM	NO: D060882	PAGE: 24.2	REVISION 00

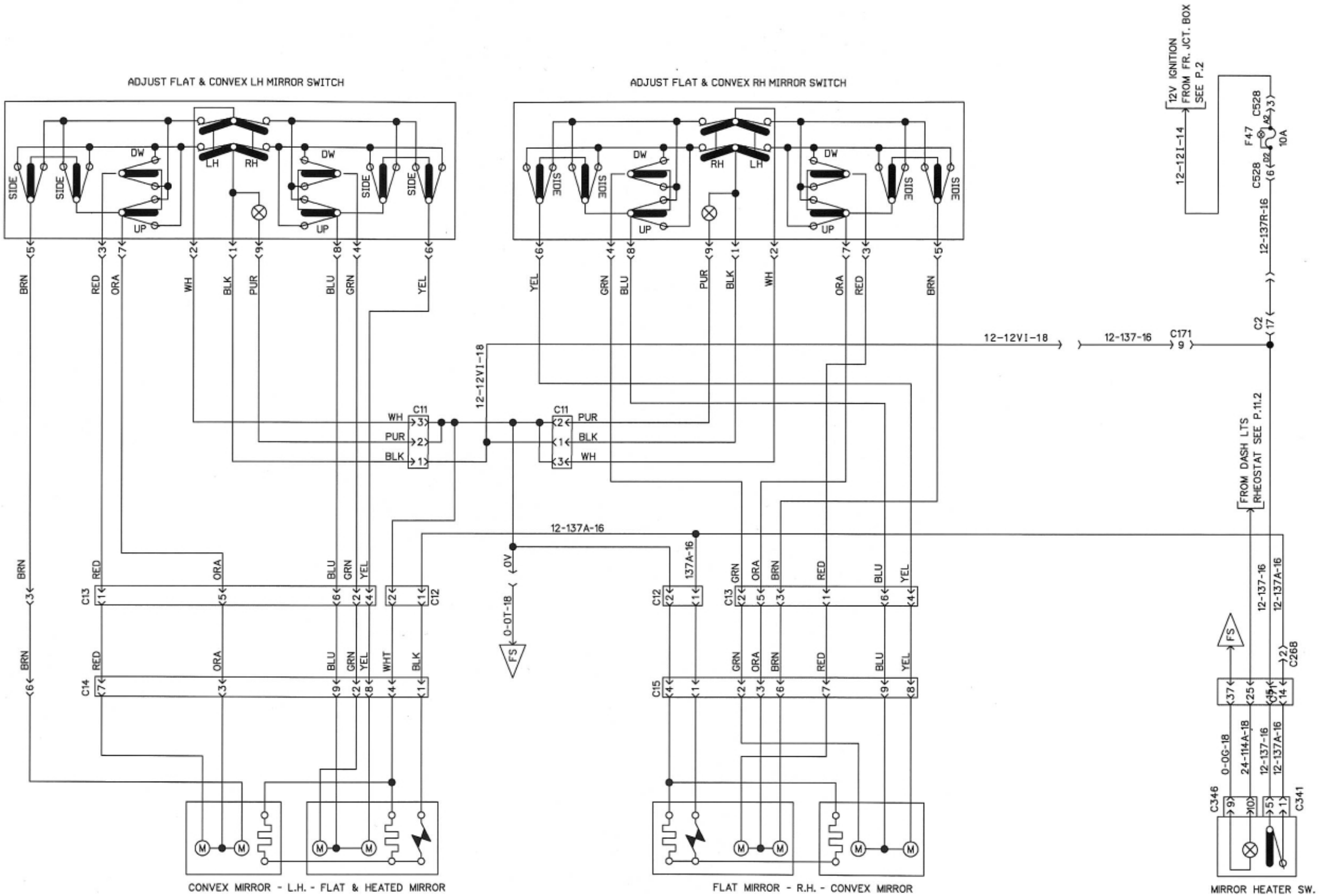

REAR VIEW MIRROR RAMCO FLAT & CONVEX - 2 ADJUSTMENT SW. & 1 HEATED SW.

PREVOST	WIRING DIAGRAM	NO: D060882	PAGE: 24.3	REVISION 00

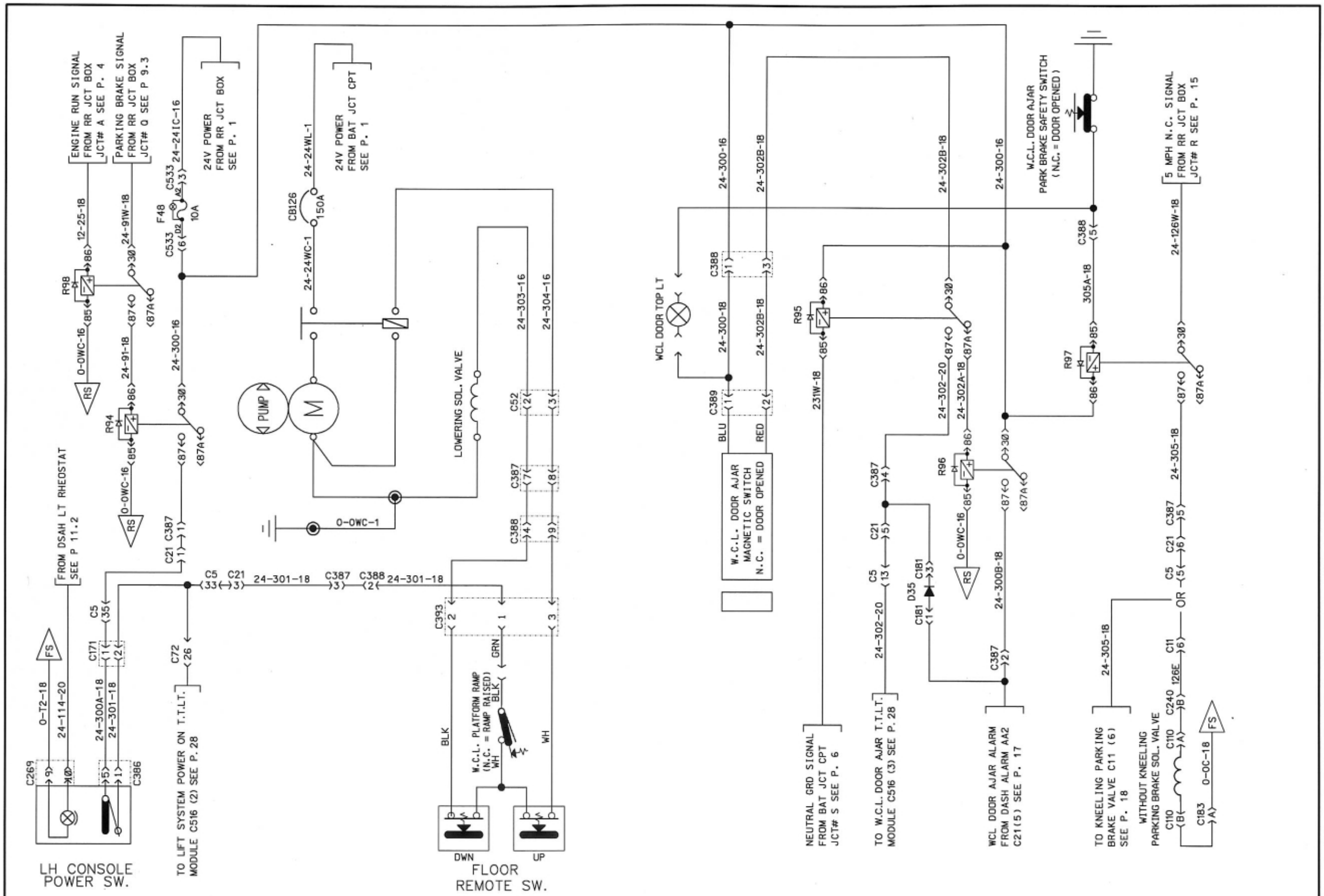

W.C.L. SYSTEM STEWART & STEVENSON

PREVOST	WIRING DIAGRAM	NO: D060882	PAGE: 25.1	REVISION 00

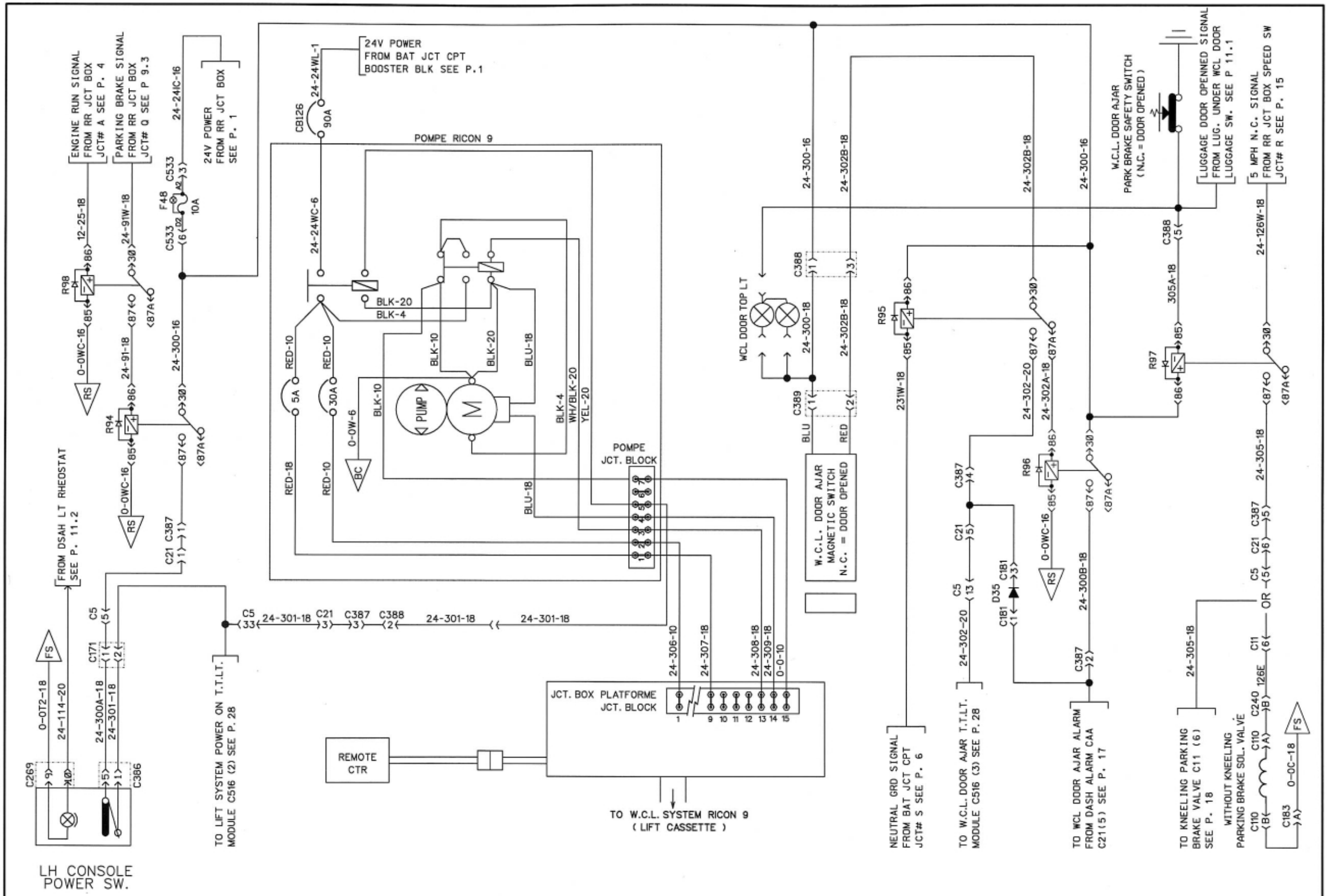

W.C.L. SYSTEM RICON 9

PREVOST	WIRING DIAGRAM	NO: D060882	PAGE: 25.2	REVISION 00

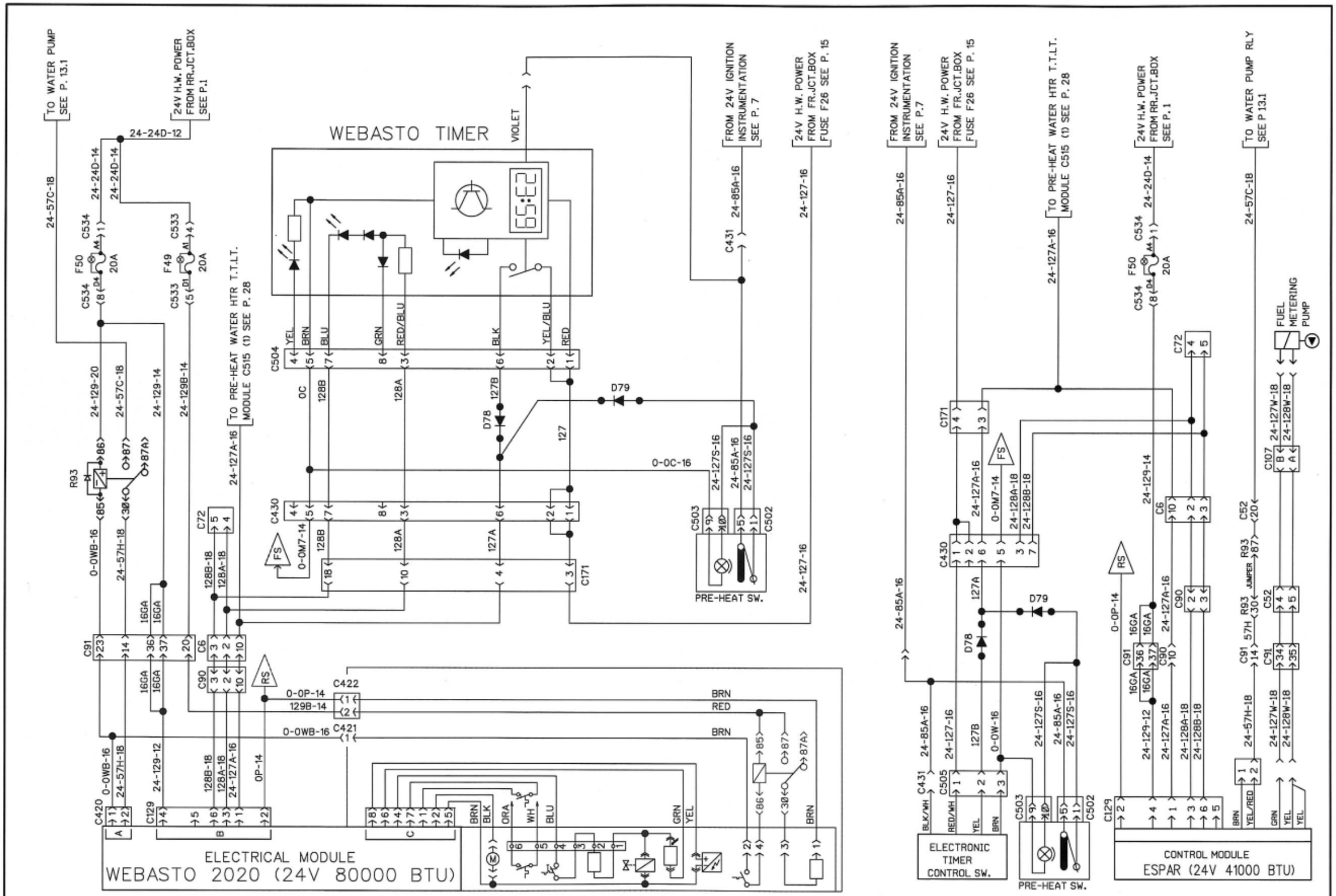
WEBASTO TIMER
ELECTRICAL MODULE
WEBASTO 2020 (24V 80000 BTU)
PRE-HEAT WATER HEATER (WEBASTO 2020)
ELECTRONIC TIMER CONTROL SW.
PRE-HEAT SW.
CONTROL MODULE
ESPAR (24V 41000 BTU)
PRE-HEAT WATER HEATER (ESPAR)
TO WATER PUMP SEE P. 13.1
24V H.W. POWER FROM RR.JCT.BOX SEE P.1
TO PRE-HEAT WATER HTR T.T.L.T. MODULE C515 (1) SEE P. 28
FROM 24V IGNITION INSTRUMENTATION SEE P. 7
24V H.W. POWER FROM FR.JCT.BOX FUSE F26 SEE P. 15
TO WATER PUMP RLY SEE P 13.1
FUEL METERING PUMP

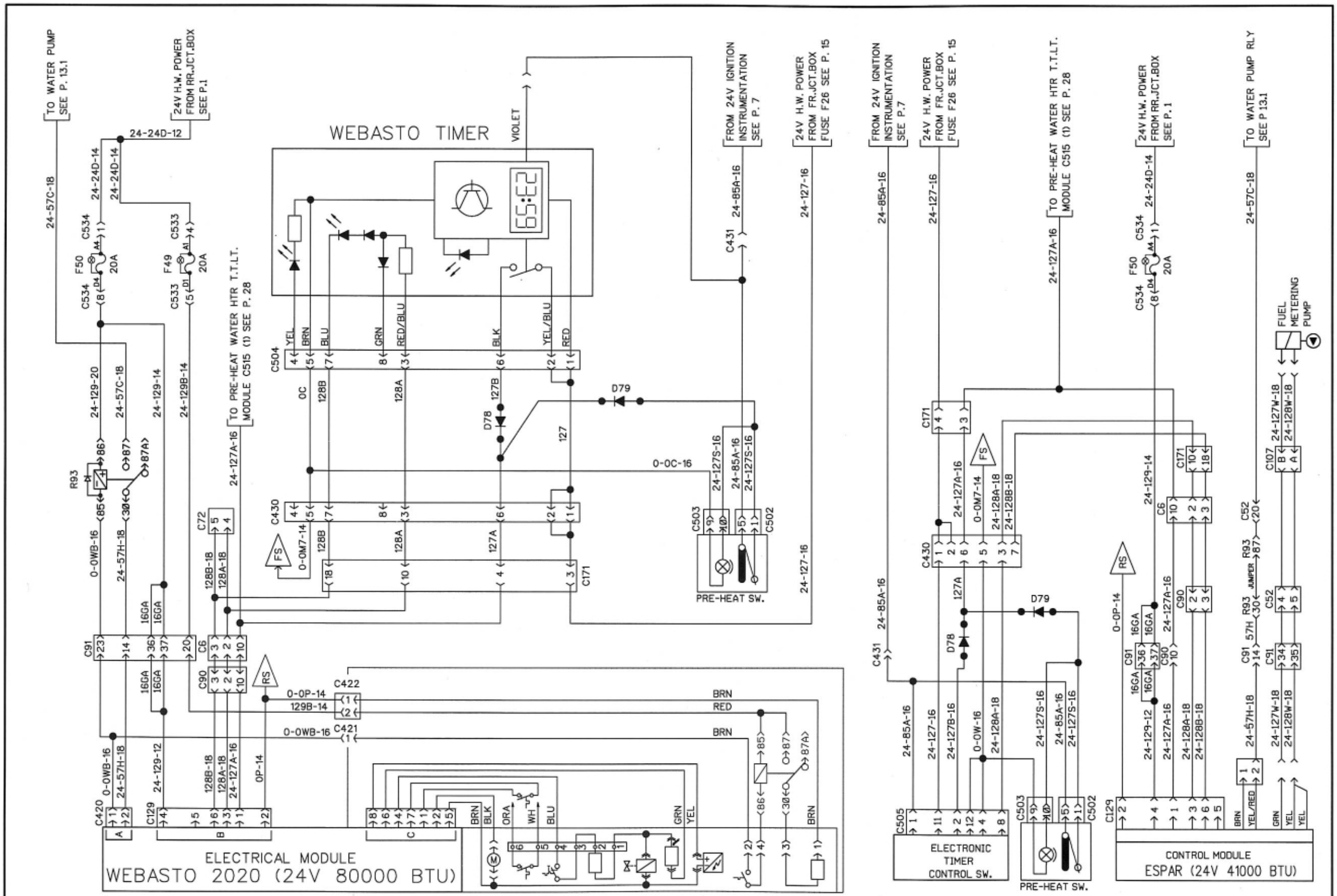

PRE-HEAT WATER HEATER (WEBASTO 2020)

PRE-HEAT WATER HEATER (ESPAR)

PREVOST	WIRING DIAGRAM	NO: D060882	PAGE: 26.1	REVISION 03

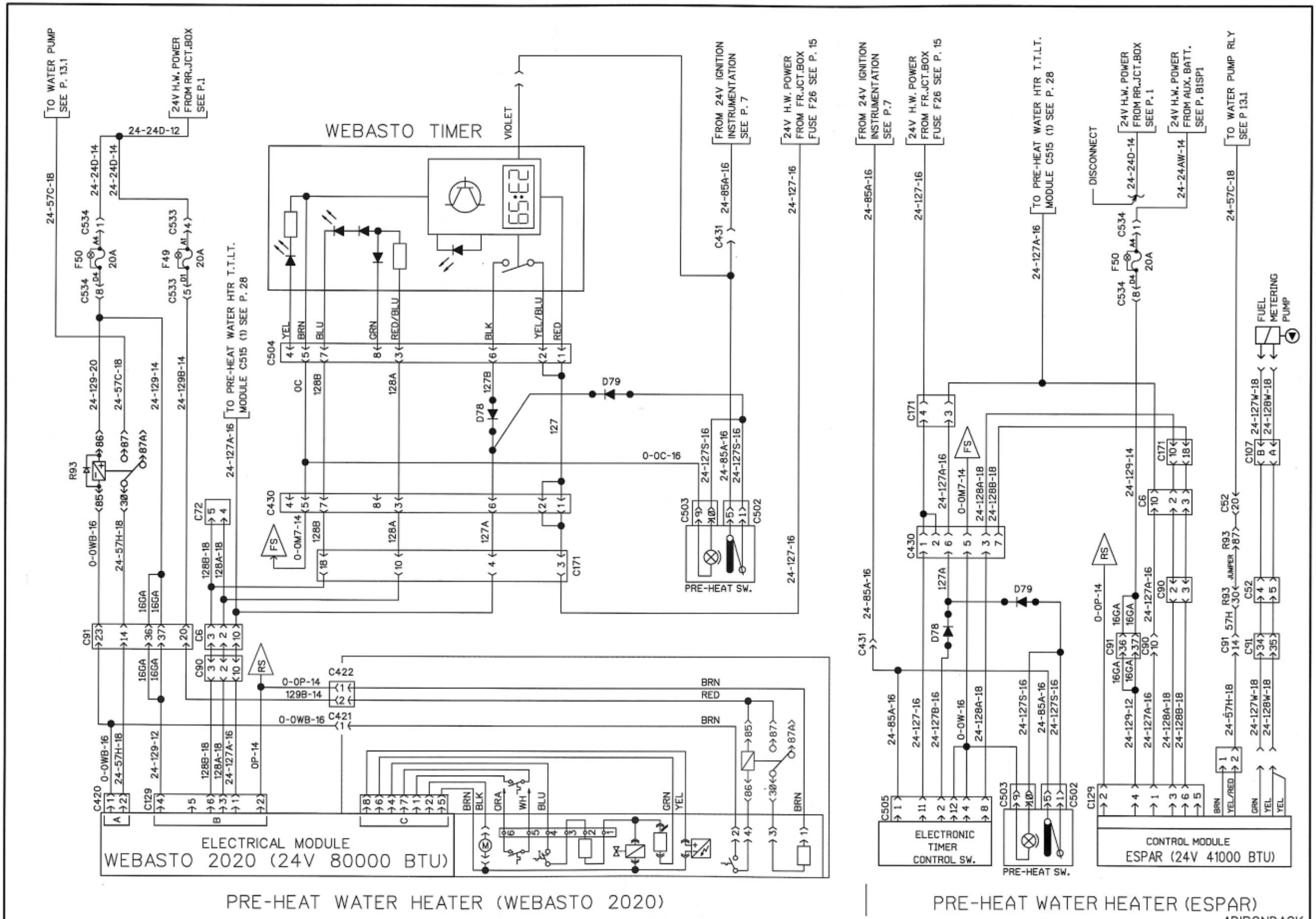

ADIRONDACK

PREVOST	WIRING DIAGRAM	NO: D060882	PAGE: 26.1sp1	REVISION 00

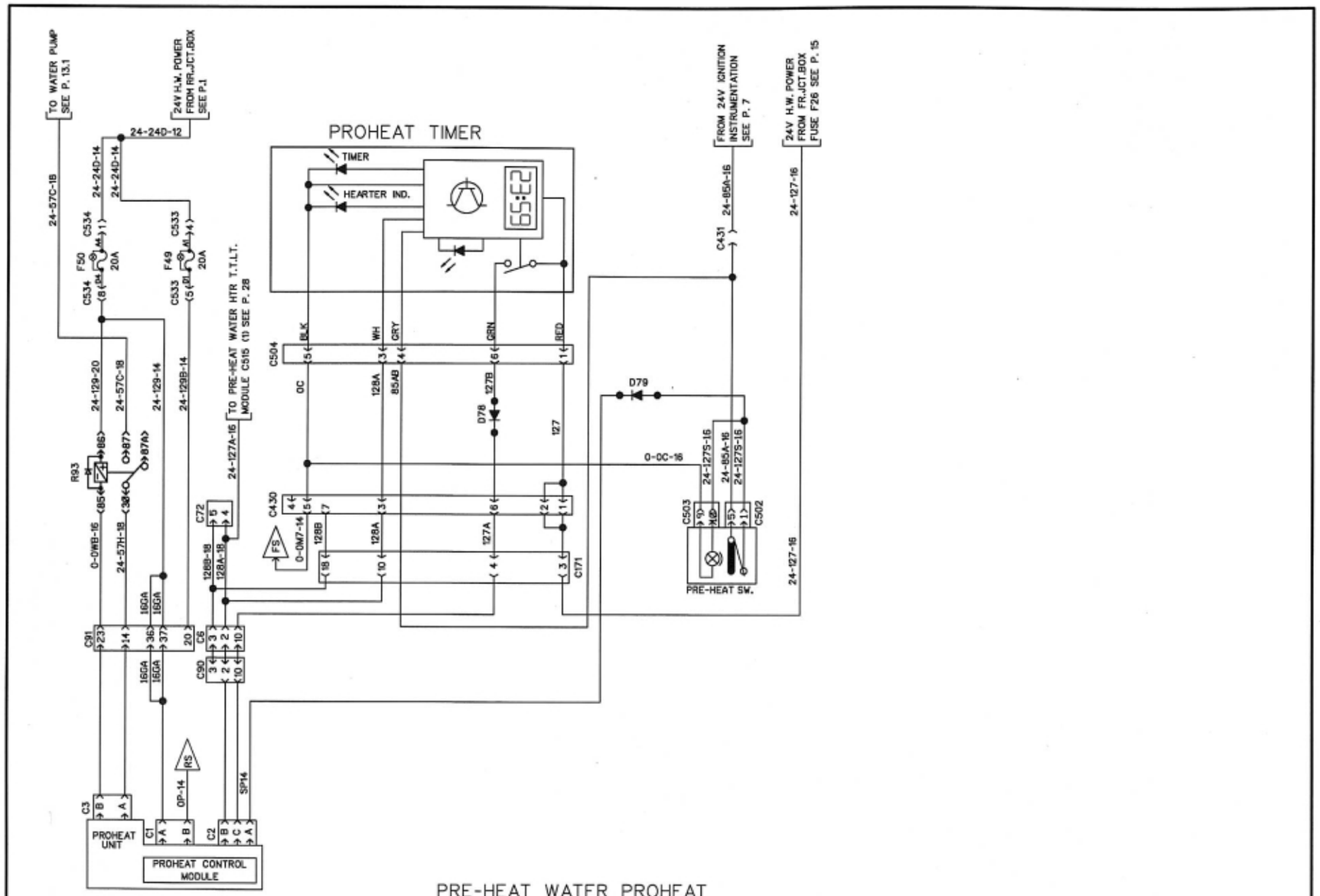

PRE-HEAT WATER PROHEAT

SPECIAL VEH. BROWN BUS V2073 & V2077

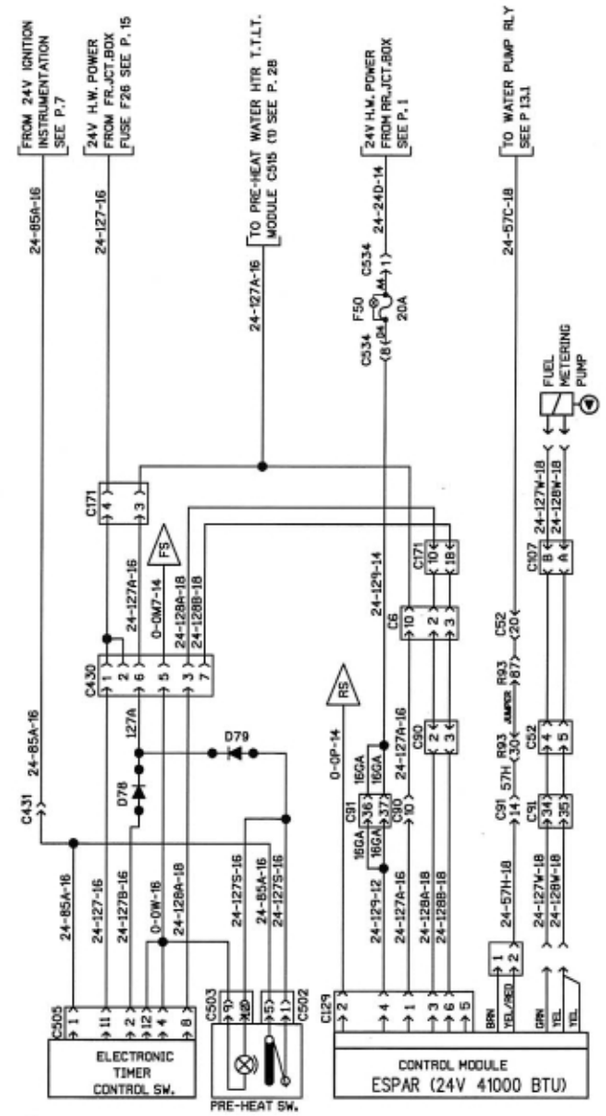

PRE-HEAT WATER HEATER (ESPAR)

PREVOST	WIRING DIAGRAM	NO: D060882	PAGE: 26.1sp2	REVISION 00

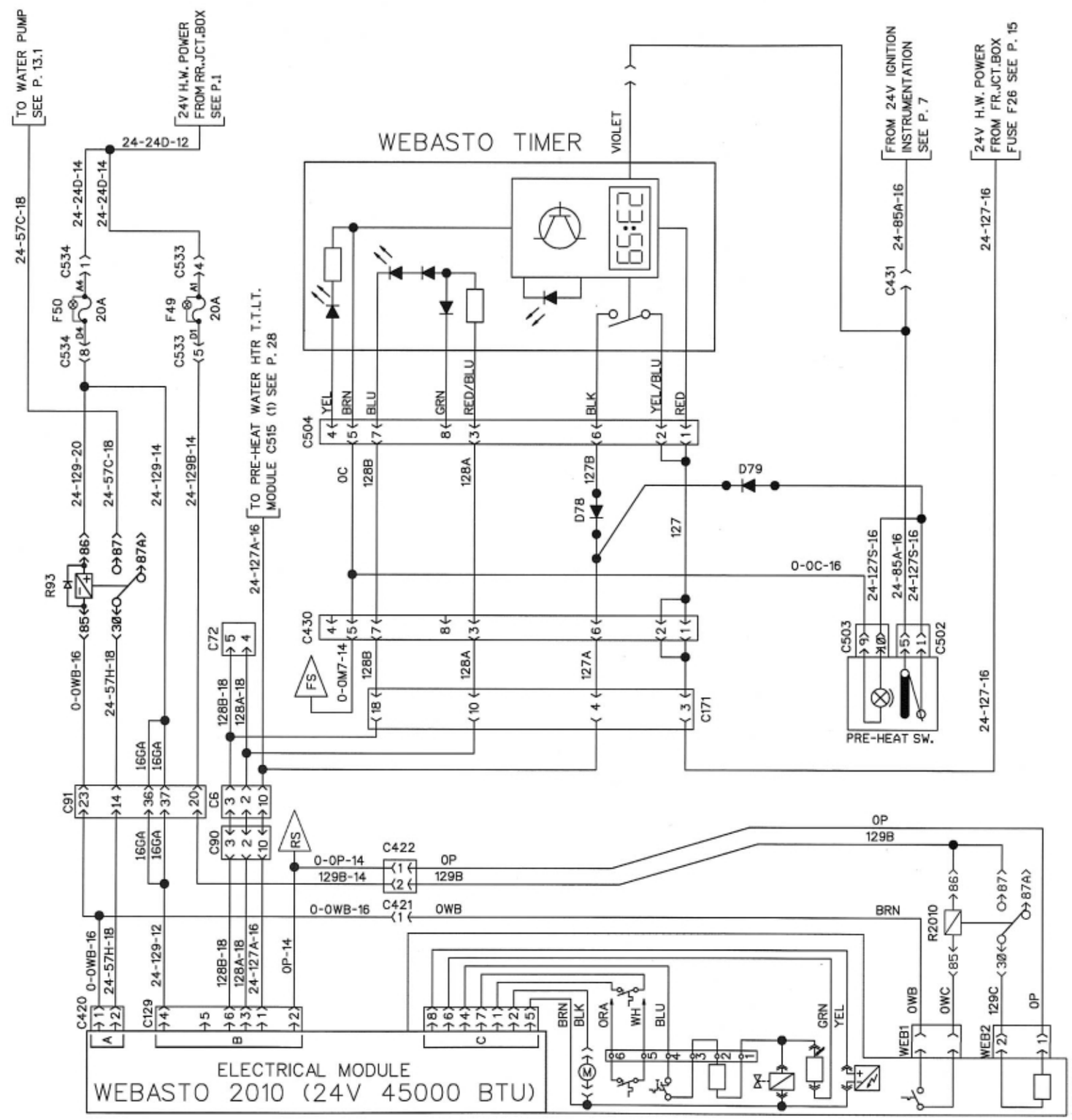

PRE-HEAT WATER HEATER (WEBASTO 2010)

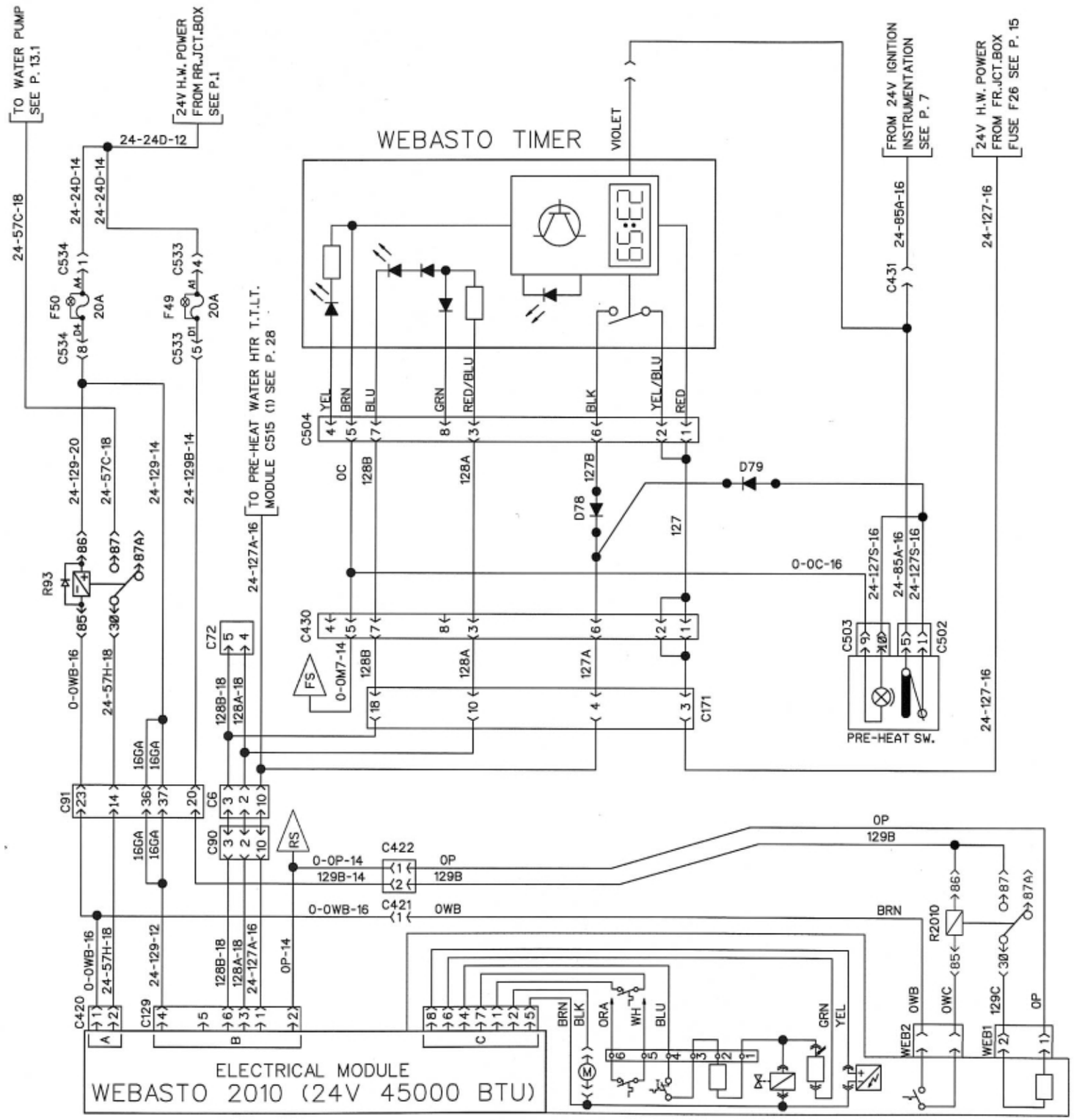

PRE-HEAT WATER HEATER (WEBASTO 2010)

PREVOST	WIRING DIAGRAM	NO: D060882	PAGE: 26.2	REVISION 03

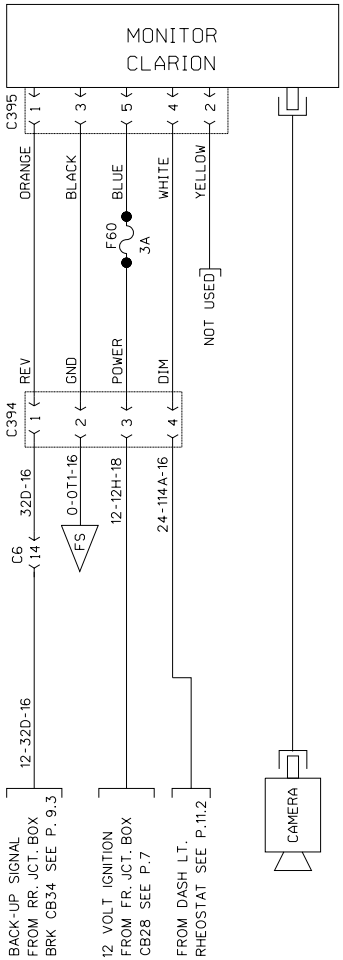

BACK-UP MONITOR (CLARION)

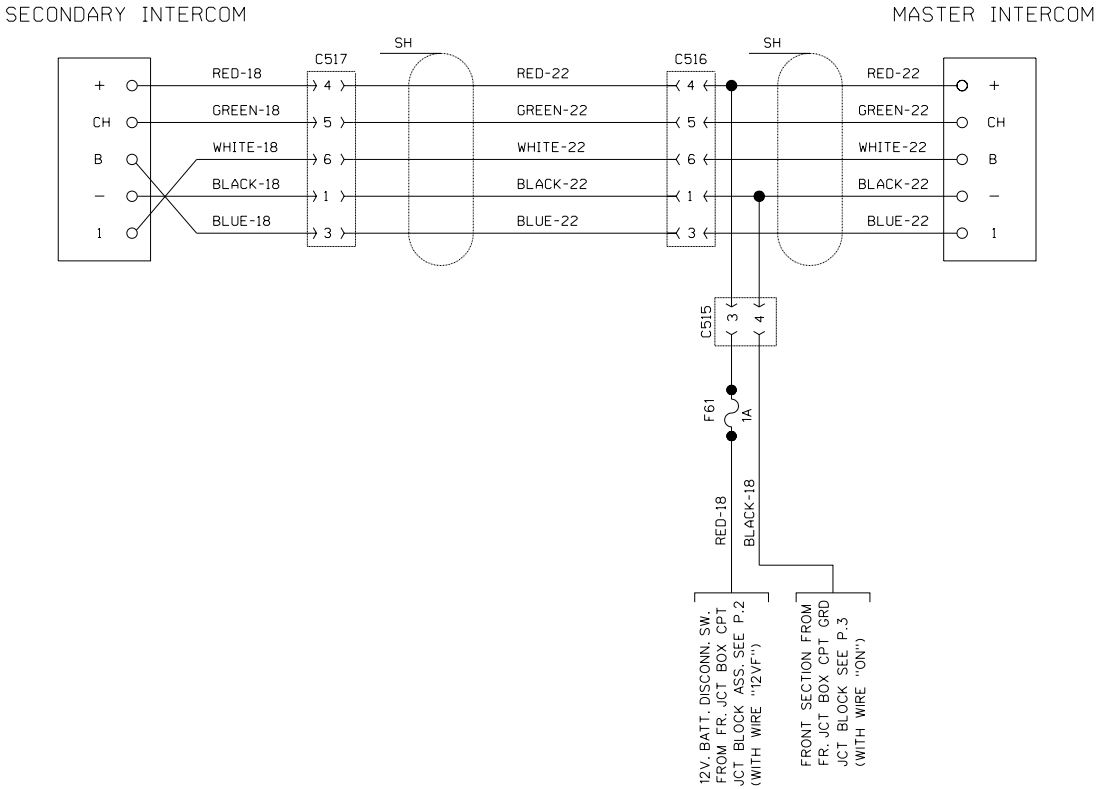

INTERCOM

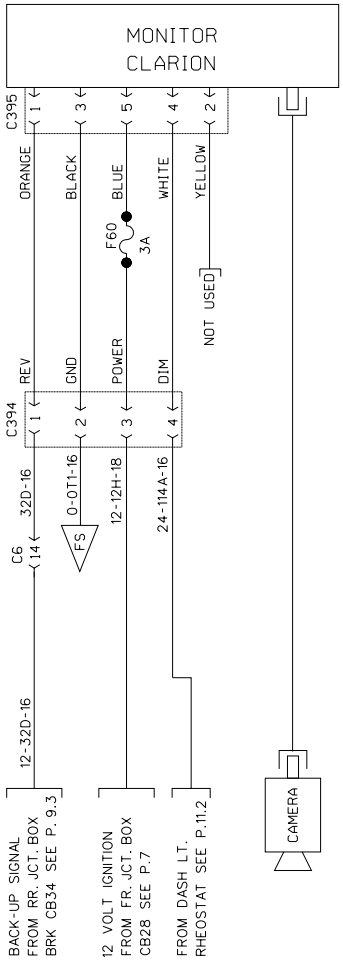

BACK-UP MONITOR (CLARION)

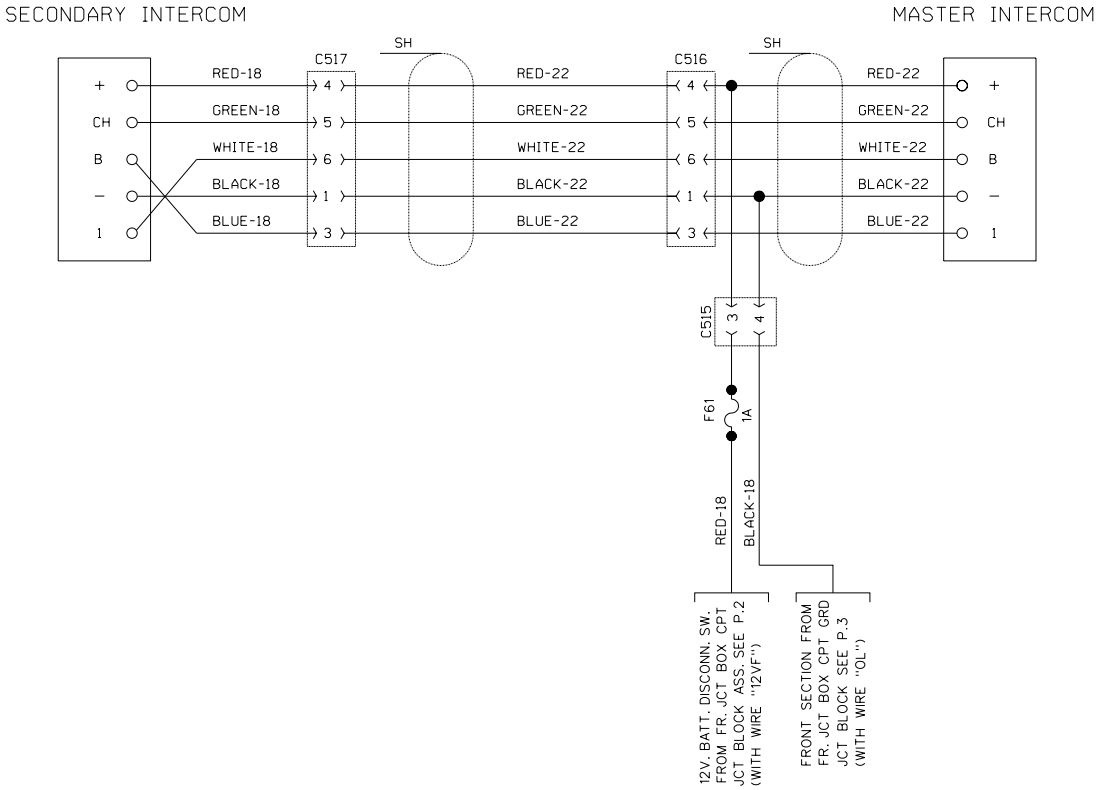

INTERCOM

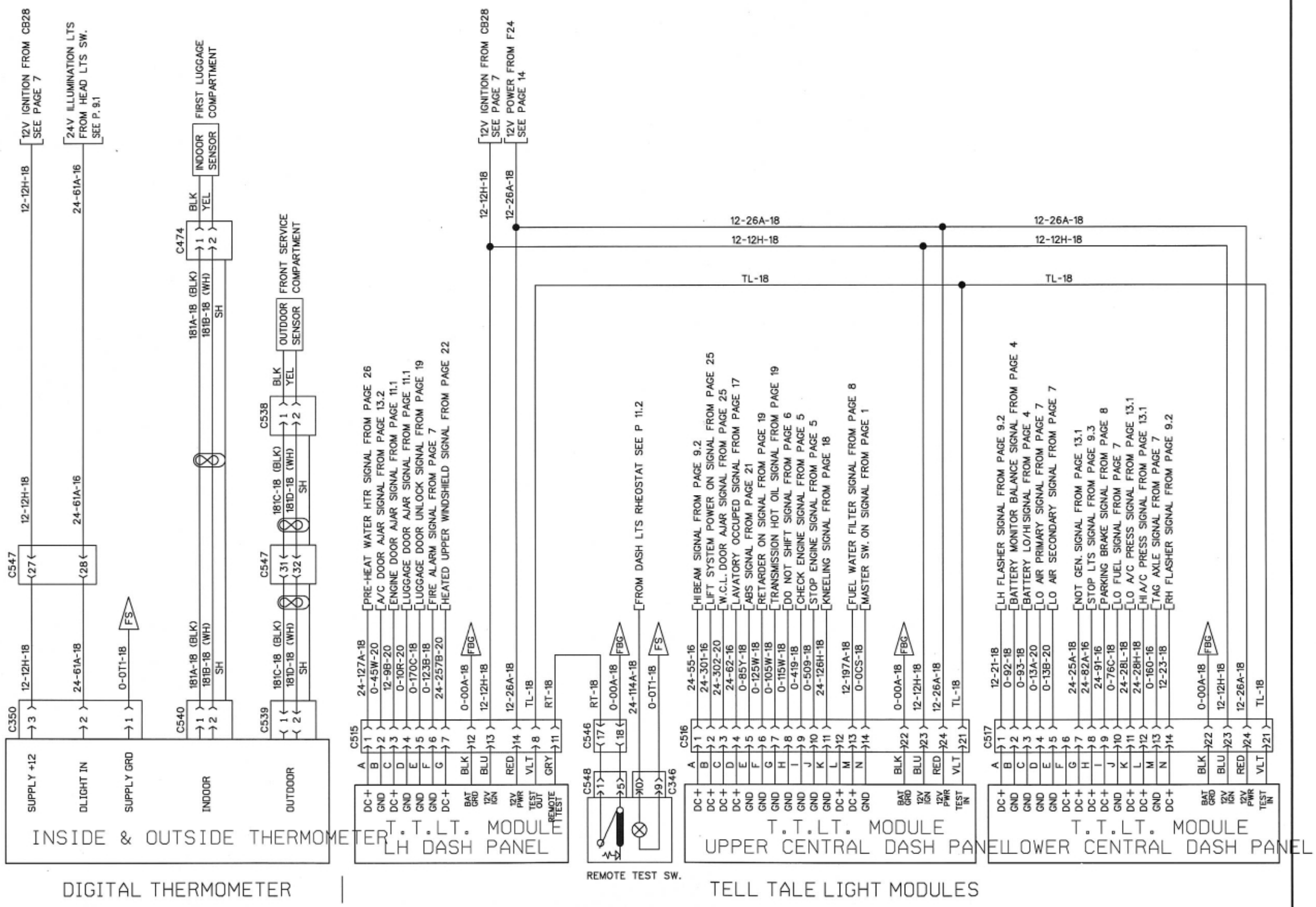

PREVOST	WIRING DIAGRAM	NO: D060882	PAGE: 28	REVISION 01